BROILMASTER®

PREMIUM GRILLS

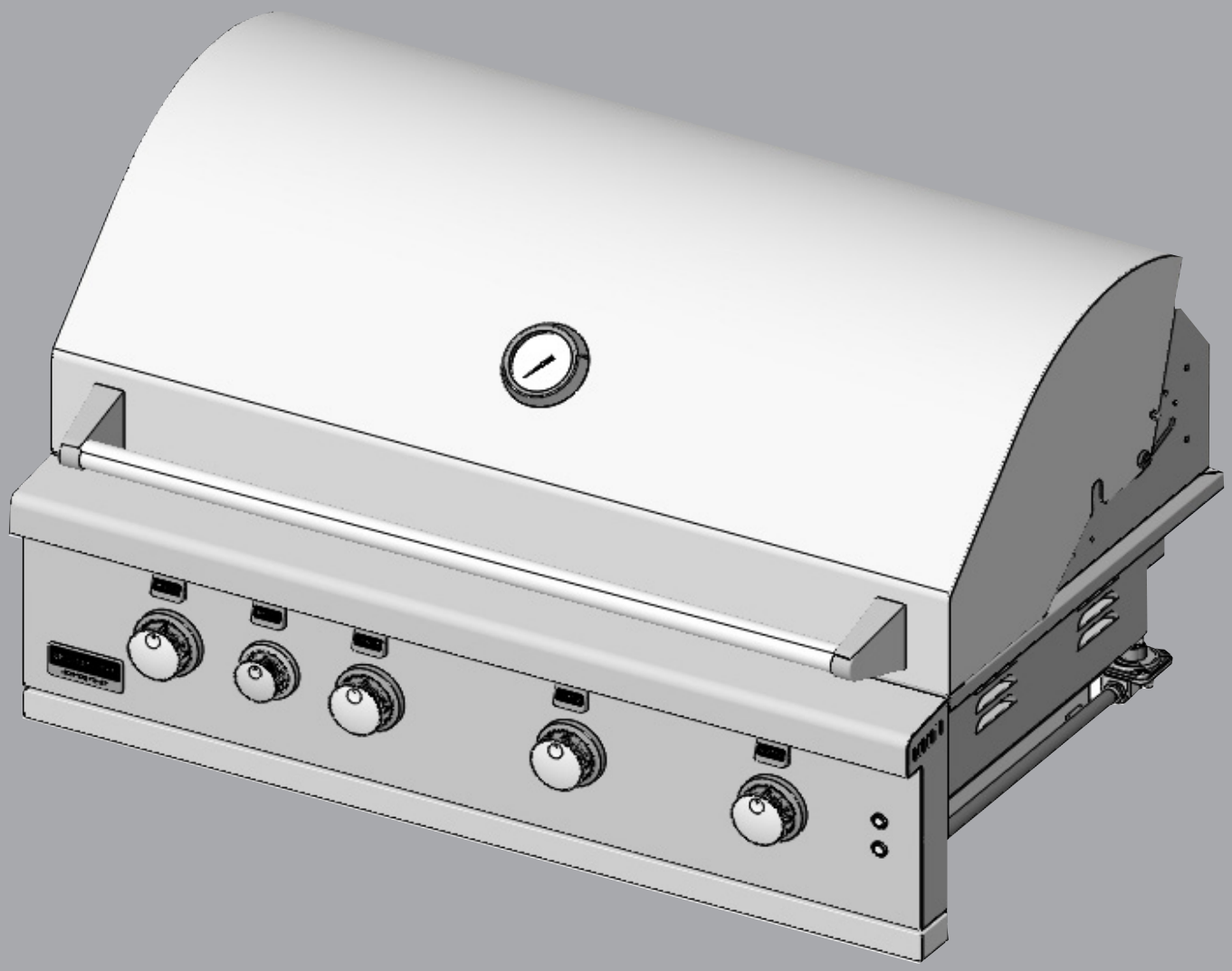

GAS GRILL
CARE & USE / INSTALLATION

Installation, Care And Use Of Your BROILMASTER Professional Cooking Product

THIS MANUAL MUST REMAIN WITH THE PRODUCT OWNER FOR FUTURE REFERENCE.

This Manual Covers The Following BROILMASTER Products

GRILL MODELS: • **BSG262N-2** • **BSG424N-2** • **BSG343N-2**

GAS-FIRED C UL US LISTED

⚠ WARNING

Do not store or use gasoline or other flammable liquids or vapours in the vicinity of this or any other appliance. An propane cylinder not connected for use shall not be stored in the vicinity of this or any other appliance.

⚠ DANGER

If you smell gas:

1. **Shut off gas to the appliance.**
2. **Extinguish any open flame.**
3. **Open lid.**
4. **If odor continues, keep away from the appliance and immediately call your gas supplier or your fire department.**

FOR OUT DOOR USE ONLY

IMPROPER INSTALLATION, ADJUSTMENT, ALTERATION, SERVICE OR MAINTENANCE CAN CAUSE PROPERTY DAMAGE, INJURY OR DEATH. READ THIS MANUAL THOROUGHLY BEFORE INSTALLATION, USE OR SERVICING OF THIS EQUIPMENT.

NOTE TO INSTALLER

This manual must remain with grill. Check your local building codes for proper method of installation. In the absence of local codes, this unit should be installed in accordance with National Fuel Gas Code No. ANSI Z21.58D-2002 USA or CAN/CGA-B149.1/.2 Natural Gas/ Propane Code. (Canada) latest edition or the National Electrical Code ANSI/NFPA No. 70 or the Canadian Electrical Code CGA 1.6b2005 or latest edition.

BROILMASTER® PREMIUM GRILLS

TABLE OF CONTENTS

BROILMASTER - BBQ Models 2
BROILMASTER - Unique Features And Benefits 4
Product Specifications 5
Overall Grill Dimensions 6
Control Identification 7
Warning Instructions 8
NOTICE: Commonwealth Of Massachusetts 9
Grill Location (*Using Your Grill During In Windy Conditions*) 10/11/12
Built-In Grill Dimensions 13
Vent Registers 14
Built-In Sleeve Dimensions 15
Electrical Requirements & Hook-up 16
Wiring Schematics 17
Propane Gas Cylinder Safety 18
Gas Requirements And Hook-up 19/20/21/22
Important Safety Grilling Information 23
Converting Your Gas Grill 24/25
Converting Your Gas Grill Type 26
Regulator Gas Conversion 27
Lighting The Burners 28
Manually Lighting The Grill 29
Burner Type Identification 30
Using The BROILMASTER Grill 30
Direct Cooking Method 31
Indirect Cooking Method 31
Using The Rotisserie 32
Cooking Tips 33
Burner Cleaning And Adjustment 34
Warnings 35
Cleaning The Grill 36/37
Light Bulb Replacement 38
Warranty 39
Master Parts Distributor List 40
How To Order Repair Parts 40
Contacting Your BROILMASTER Dealer 41
BROILMASTER Parts List 42
Parts Diagram 43/44/45/46
Sleeves, Side Burners, And Island Accessories 47/48/49
Appliance Service History 50

BROILMASTER®
PREMIUM GRILLS

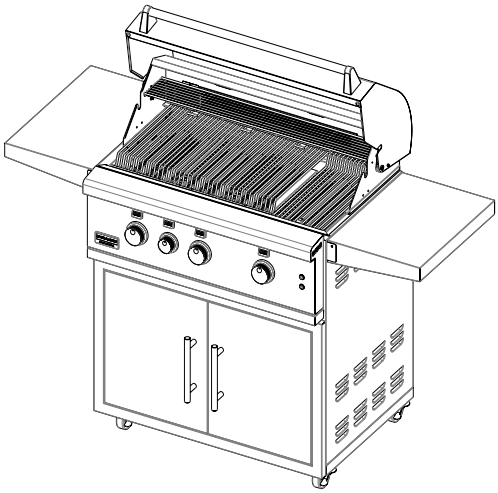

BROILMASTER
Unique Features And Benefits

The BROILMASTER gas grill has some of the most unique grilling features that will enhance your grilling experience and make you that “master chef”. These features include multilevel grilling, enhanced flame tamers to create even heat and minimize flair-ups, Bow-tie burner design with multi ported heat zoning technology and an optional infrared burner.

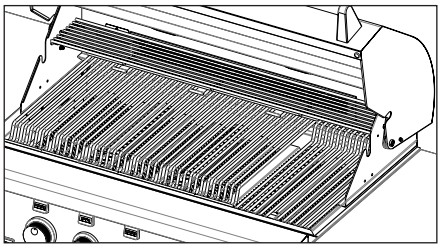

Far right grill shown in the lower position.

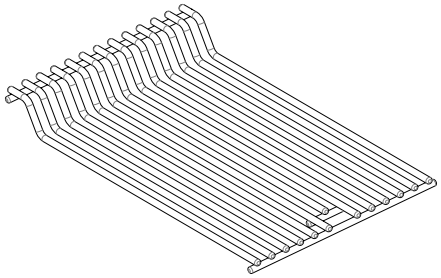

Multilevel cooking surfaces allow you to be able to cook food closer to the burner and sear the food quickly while raising the cooking surface allows more delicate food to be cooked slower on the same heat. Food that may create more flareups can also be placed further away from the heat.

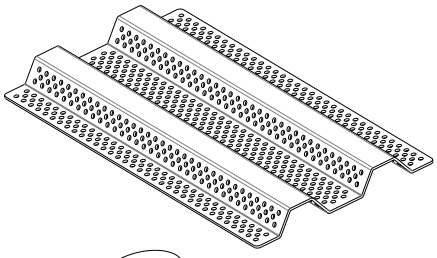

This flame tamer pump’s even heat onto the food at the same time as vaporizing overflow juices that create added flavor in the food.

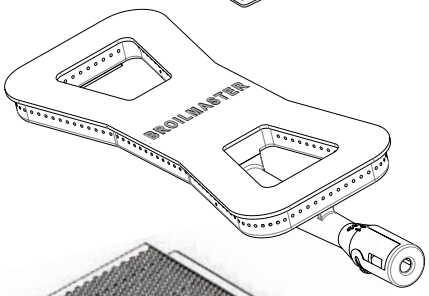

Bow-tie burner technology is unique to BROILMASTER and has been used for many years. This new Burner has “Zone Porting” where the use of different size holes allows for even heating for the front and back across the entire zone.

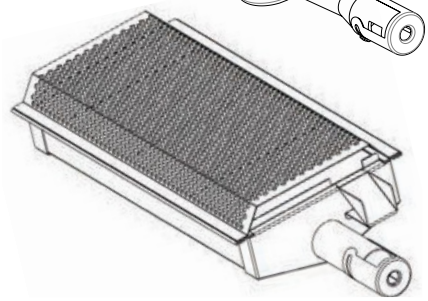

An optional sear burner takes the place of the traditional Bow-tie burner for those occasions where intense heat is required to quickly sear the food. Professional restaurants have been using Infrared and sear technology to sear in the natural juices of the food.

BROILMASTER®
PREMIUM GRILLS

Product Specifications

Description	26" BSG262N	34" BSG343N	42" BSG424N
Main Cooking Area Dimension	456	608	760
Total Cooking Area Sq. In. (Includes Warming Rack)	606	806	1006
Gas Type	NAT	NAT	NAT
LP Conversion Kit	Packed w/Grill	Packed w/Grill	Packed w/Grill
Orifices Main Burners NAT Gas	2 - 2.08 mm	3 - 2.08 mm	4 - 2.08 mm
Orifices Main Burners LP Gas	2 - 1.30 mm	3 - 1.30 mm	4 - 1.30 mm
Orifices Rear Burner NAT Gas	N/A	1.5 mm	1.5 mm
Orifices Rear Burner LP Gas	N/A	1.1 mm	1.1 mm
Burner Type	2 - Cast SS Bow Tie	3 - Cast SS Bow Tie	4 - Cast SS Bow Tie
Burner BTU's (Each/Total)	18,000 / 36,000	18,000 / 54,000	18,000 / 72,000
Cooking Grids	2 - 5/16" Two Position SS	3 - 5/16" Two Position SS	4 - 5/16" Two Position SS
Vaporizers - Flame Tamers	2 - SS	3 - SS	4 - SS
Heat Zone Dividers	1 - SS (Removable)	2 - SS (Removable)	3 - SS (Removable)
Rear Rotisserie Burner	N/A	11,000 BTU	11,000 BTU
Rotisserie Kit	Optional	Optional	Optional
Lid Assembly	Fully Welded w/Polished Edges	Fully Welded w/Polished Edges	Fully Welded w/Polished Edges
Control Panel	Fully Welded	Fully Welded	Fully Welded
Drip Tray	Fully Welded	Fully Welded	Fully Welded
Ignition Type (No Battery)	Push And Turn Flame Thrower	Push And Turn Flame Thrower	Push And Turn Flame Thrower
Warming Rack	SS Tilt And Lock Away	SS Tilt And Lock Away	SS Tilt And Lock Away
Temp Gauge	Hood	Hood	Hood
Control Panel Lights	LED Blue 12V	LED Blue 12V	LED Blue 12V
Interior Work Lights	2 - Halogen 12V	2 - Halogen 12V	2 - Halogen 12V
Cutout Dimensions For Grill	11-3/4H x 21D x 23-1/2W	11-3/4H x 21D x 31-1/2W	11-3/4H x 21D x 39-1/2W

BROILMASTER®
PREMIUM GRILLS

Overall Grill Dimensions

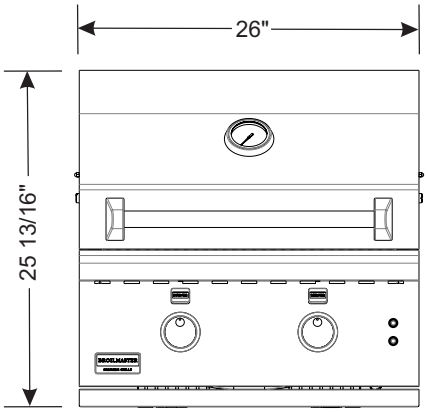

BSG26N

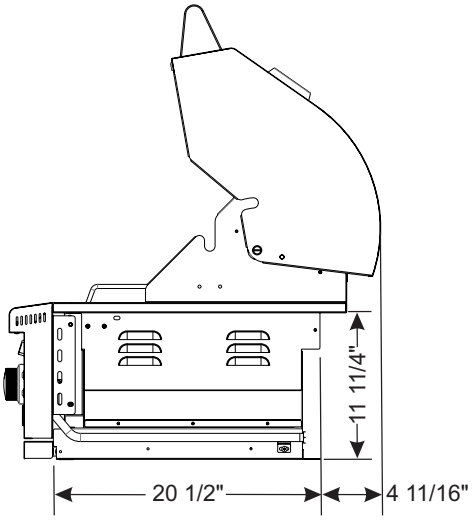

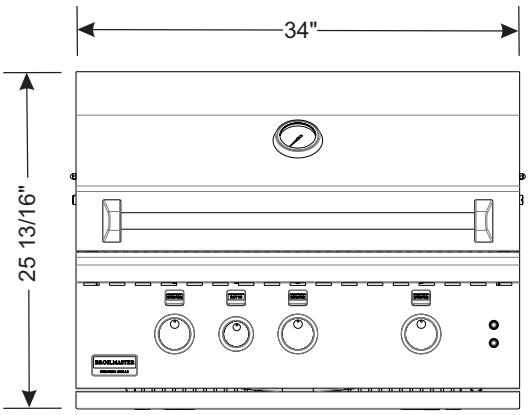

BSG34N

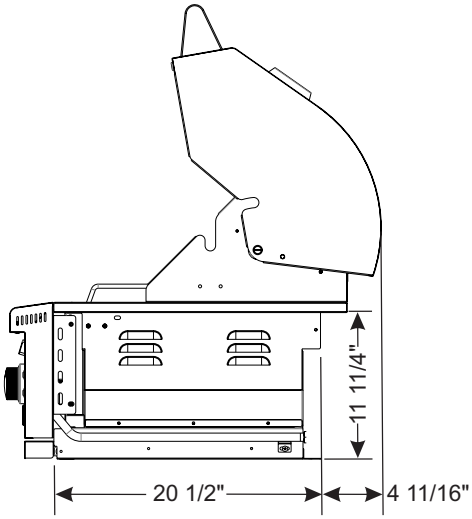

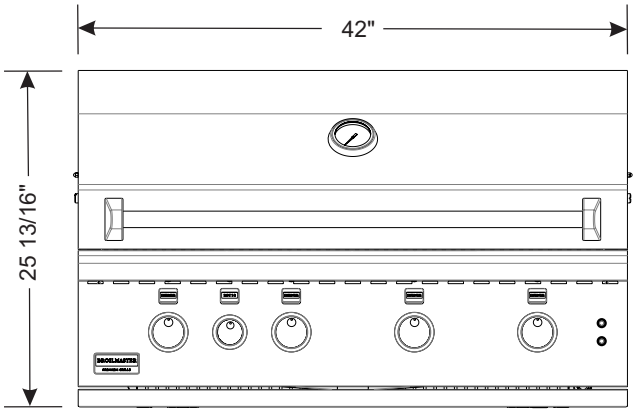

BSG42N

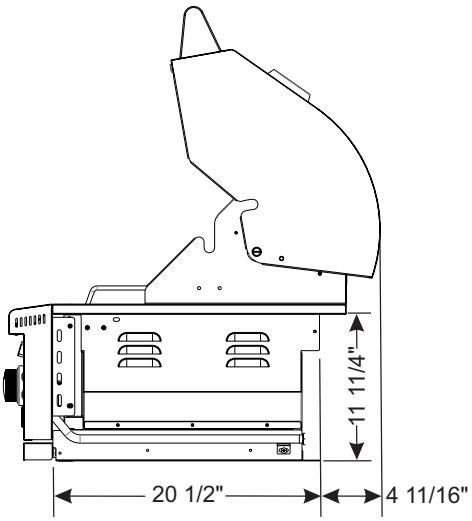

Control Identification

BSG262

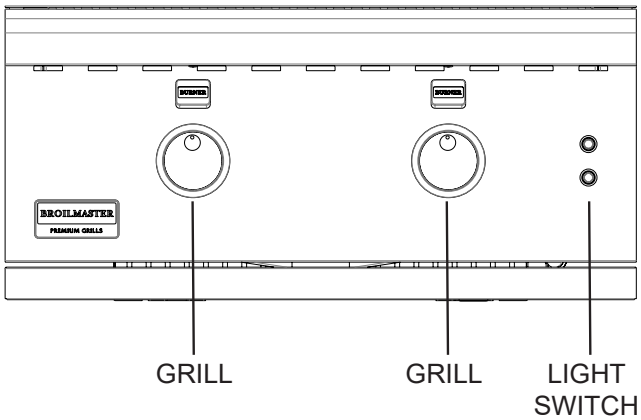

BSG343

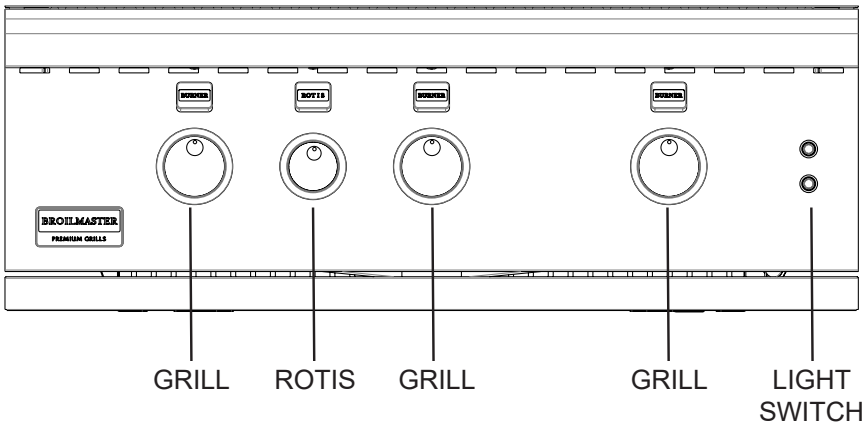

BSG424

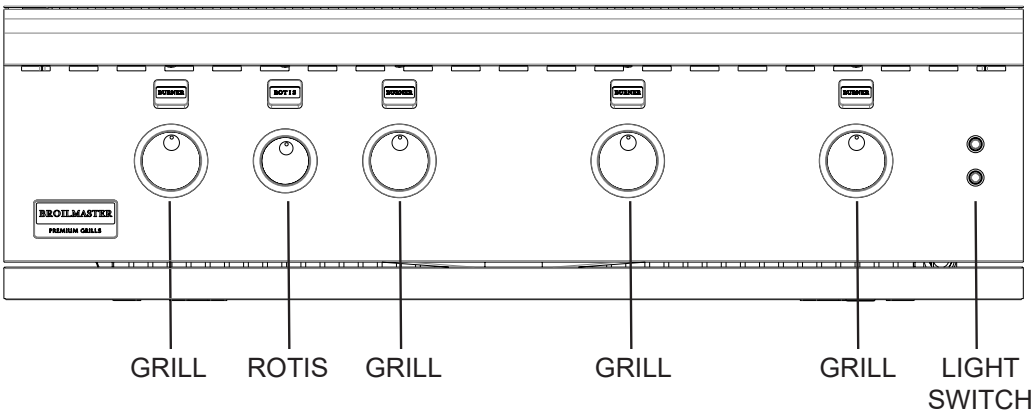

WARNING

- Read this manual carefully and completely before using your grill, to reduce the risk of fire, burn hazard or other injury, and to ensure proper installation and servicing.
- Never use rusted, dented or damaged propane cylinders. Never store additional or empty propane cylinders in the grill cabinet or in the vicinity of this or any other gas or electrical appliance. Do not store propane cylinders indoors or on their sides for gas may escape. Gas cylinders are highly flammable.
- Any Children should never be left alone or unattended in an area where a grill is located. Place your grill well away from areas where children play. Do not store items that may interest children in or around the grill, in the cart, or in the enclosure or Island.
- Never move the grill when hot. When in use, portions of the grill are hot enough to cause severe burns.
- Always maintain the required clearances from combustibles as detailed. The grill is designed for outdoor use only. Never use in a garage, building, shed, breezeway, or other enclosed area. Do not use this grill under any unprotected overhead combustible construction. Combustible material exposed to heat will catch on fire.
- Gas grills are not designed or certified for and are not to be installed in or on recreational vehicles, portable trailers, boats or any other moving installation including commercial use.
- Always have a Fire Extinguisher accessible — never attempt to extinguish a grease fire with water or other liquids.
- Store your grill in a well-ventilated area. If stored indoors, detach and leave L.P. cylinder outdoors in a well-ventilated area away from heat and away from where children may tamper with it. Always leave tank outdoors.
- Keep any electrical supply cord and the fuel supply hose away from any heated surfaces. Electrical cords should be placed away from walkways to avoid tripping hazard.
- Do not repair or replace any part of the grill unless specifically recommended in this manual. Other service should be performed by a certified and qualified Gas and BBQ technician.
- If the grill is installed by a professional installer or technician, be sure that he/she shows you where your gas supply shut-off is located. All gas lines must have a shut-off that is readily and easily accessible. If you smell gas, check for gas leaks immediately. Check only with a soap and water solution. Never check for gas leaks with an open flame.
- Inspect the L.P. gas supply hose prior to each use of the grill. If there is evidence of excessive abrasion or wear, or the hose is cut, it must be replaced before using the grill.
- The outdoor cooking gas appliance and its individual shut-off valve must be disconnected from the gas supply piping system during any pressure testing of that system at test pressures in excess of 0.5 psi (3.5 kPa).
- The outdoor cooking gas appliance must be isolated from the gas supply piping system by closing its individual manual shut-off valve during any pressure testing of the gas supply piping system at test pressures equal to or less than 1/2 psi (3.5 kPa).

NOTICE: Commonwealth Of Massachusetts

1. Massachusetts requires all gas be installed using a plumber or gas fitter carrying the appropriate Massachusetts license.
2. All permanently-installed natural gas or propane installations require a “T” handle type manual gas valve be installed in the gas supply line to this appliance.
3. This does not apply to portable propane installations using a 20 pound cylinder.

WARNING! CALIFORNIA PROPOSITION 65

1. The burning of gas cooking fuel generates some by-products which are on the list of substances which are known by the State of California to cause cancer or reproductive harm.
2. California law requires businesses to warn customers of potential exposure to such substances. To minimize exposure to the substances, always operate this unit according to the use and care instructions found in this manual. Be certain to provide adequate ventilation when cooking.
3. **WARNING**: Handling the brass material on this product exposes you to lead, a chemical known to the state of California to cause cancer, birth defects or other reproductive harm. (Wash hands after handling this product.)
4. For more information go to this website: **www.p65warning.ca.gov**

Grill Location

WARNING

- Never install this product into a combustible enclosure. Doing so could result in fire, property damage and personal injury. Combustible material is anything that can catch on fire.
- Never locate the grill under a roof or overhang, in a building, garage, shed or other such enclosed area.
- Installation must conform with local codes or, in the absence of local codes, with either the National Fuel Gas Code, ANSI Z223.1/NFPA 54, Natural Gas and propane Installation Code, CSA B149.1, or Propane Storage and Handling Code, B149.2, in Canada.

WHERE IS THE WIND COMING FROM?

When selecting a suitable location, consider important factors such as exposure to the wind and foot-traffic patterns.

If you have a free standing grill, position it so the prevailing wind blows into the front control panel (at your back when grilling), supporting the proper front of BBQ to rear of BBQ airflow. Built-in grills located in areas with prevailing winds should be protected by a wind barrier.
Winds hitting the back of the grill directly may cause problems, as well as wind blowing along the hood opening

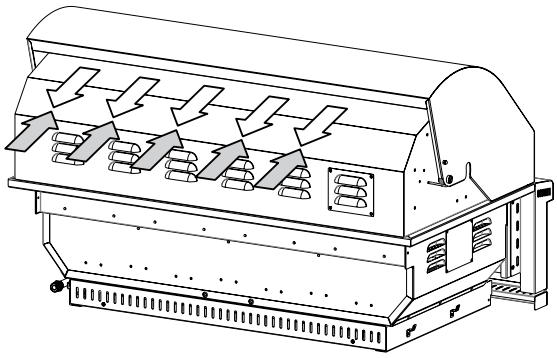

Be sure wind doesn't blow into the back of the hood gap.

HOW LONG IS YOUR GAS RUN GOING TO BE?

Keep all gas supply lines as short as possible because gas lines lose pressure over distance and with each elbow and tee that is added. This drop in pressure affects grill performance.

CHECK IF THE BBQ IS LEVEL.

Proper leveling during installation is critical. A grill that is out of level will cause erratic burner combustion and inefficient, uneven heating. A carpenter's spirit level should be used to level the grill both front-to-back and side-to-side.

If the floor is uneven or has a decided slope, re-leveling may be required each time you move a freestanding unit.

Grill Location (Cont'd)

USING YOUR GRILL IN WINDY CONDITIONS:

- As a high-performance gas appliance, your BROILMASTER grill requires significant amounts of air to support the burner combustion process. Your grill has been engineered to take air in through the control panel area, and exhaust the combustion out through the gap between the front and rear hoods
- Using your grill in windy conditions can disrupt the proper flow of air through your grill, leading to reduced performance, or in certain severe cases, causing heat buildup in the control panel area. This can lead to problems such as having the control knobs getting hot or melting, or burn hazards when the control panel surfaces become too hot to touch.
- If you have a freestanding grill, it is best to position the unit so the prevailing wind blows into the front control panel (or at your back), thus supporting the proper airflow. Winds hitting the back of the grill directly are the most likely to cause problems, although wind blowing along the hood gap can also be a problem.
- Please note that damage to your grill resulting from use in windy conditions, such as melted knobs or igniter wires, or control panel discoloration from heat build-up, are excluded from warranty coverage.
- Outdoor grilling can create more heat than indoor kitchen ranges.

BUT THERE ARE A FEW THINGS YOU CAN DO TO FURTHER PREVENT THE POSSIBILITY OF IMPROPER HEAT BUILDUP:

- If you suspect the grill is overheating, using an heat resistant mitt, open the front hood. Then adjust the burner control knob to a lower setting. Do not grab the knobs without testing the temperature of them.
- Install your grill with a wind break behind it. This is a wall, fence or anything that will disrupt the wind directly hitting the gas grill.
- Situate the grill so prevailing winds are not blowing into the rear of the grill.
- On windy days, be careful not to leave the hood down for more than 15 minutes when the burners are on high. (Never leave the grill unattended when in operation)

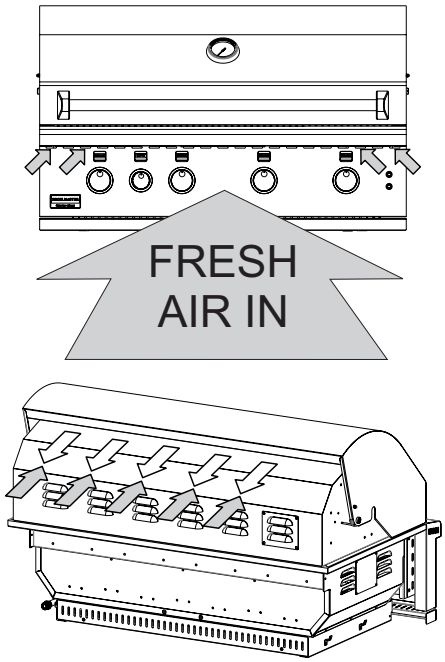

Wind hitting the back of the grill can disrupt proper exhaust.

Grill Location (Cont'd)

BUILT IN LOCATION:

- The BROILMASTER Built in model is designed for easy installation into a non-combustible masonry enclosure.
- The BBQ must be surrounded by non-combustible material like Brick or Hardibacker and must not be installed in an island made of combustible material.

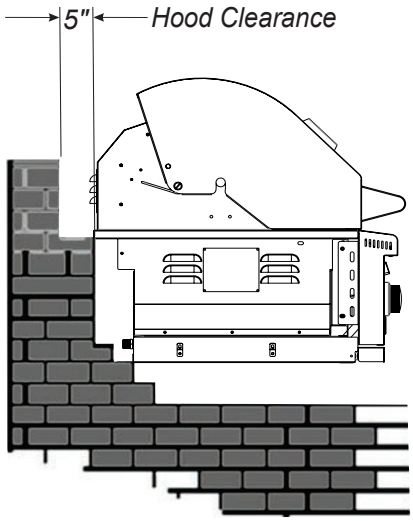

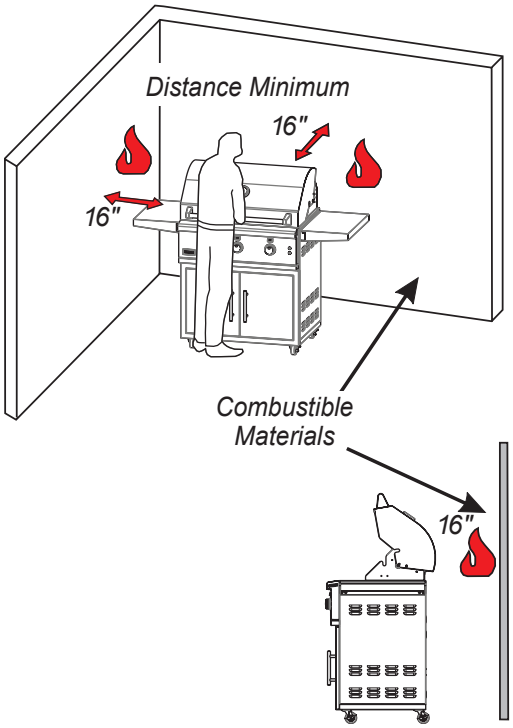

- The grill drops into the cutout opening and sits on the sides and back of the grill. There is no need to fasten the grill to the island. The gas grill must be able to be removed for general maintenance so do not grout sides or fasten in.
- For the hood to open there is a minimum of 5" clearance behind the hood. There is a required 12" clearance on each side of the Gas Grill. Remember that combustible materials should not be located behind the grill, because the 5" space doesn't satisfy the distance required from a combustible surface. See below clearance to combustibles.

CLEARANCE TO COMBUSTIBLE CONSTRUCTION:

Minimum clearance from sides and back of unit to adjacent combustible construction below top of unit are 16" from sides and 16" from back. Use your grill at least 16" away from any wall or surface.

Use your grill 16" or more away from any combustible objects that can melt or catch fire such as vinyl or wood siding, fences, overhangs, or any other sources of ignition; including pilot lights and live electrical appliances.

Do not use your grill under any overhead combustible construction. Never use your gas grill in a garage, porch, shed, breezeway, or any other enclosed area. Never use your gas grill on a balcony, deck, or patio above the ground floor of your home.

Built In Grill Dimensions

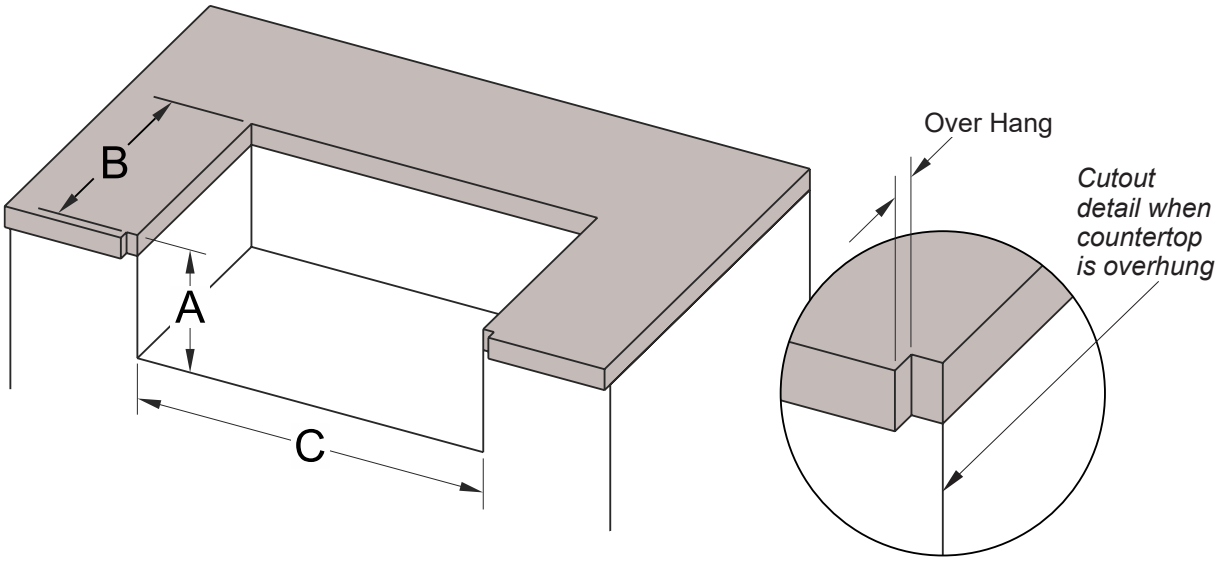

	Model #	Cutout A	Cutout B	Cutout C
26" 2 Burner	BSG262N	11-3/4"	21"	23-1/2"
34" 3 Burner	BSG343N	11-3/4"	21"	31-1/2"
42" 4 Burner	BSG424N	11-3/4"	21"	39-1/2"

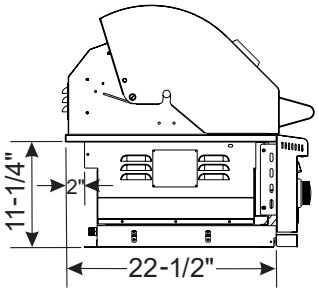

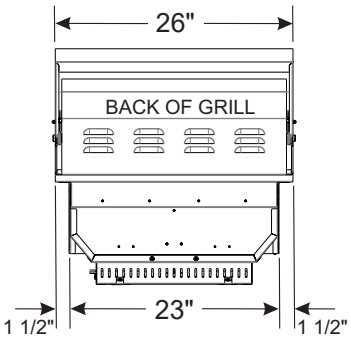

BSG262

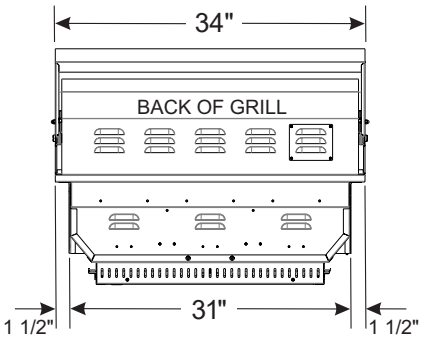

BSG343

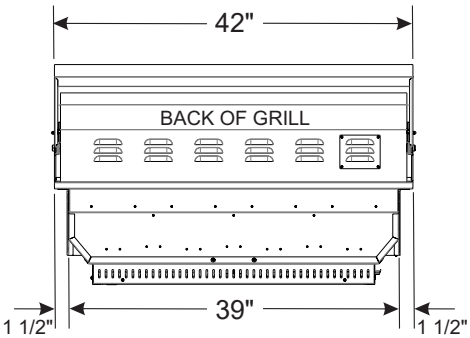

BSG424

Vent Registers

REQUIRED WHEN AN LP GAS TANK IS USED

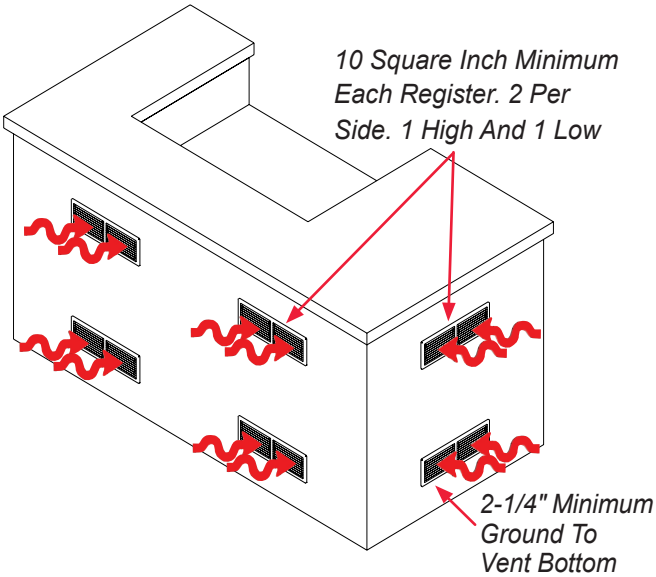

LP Gas

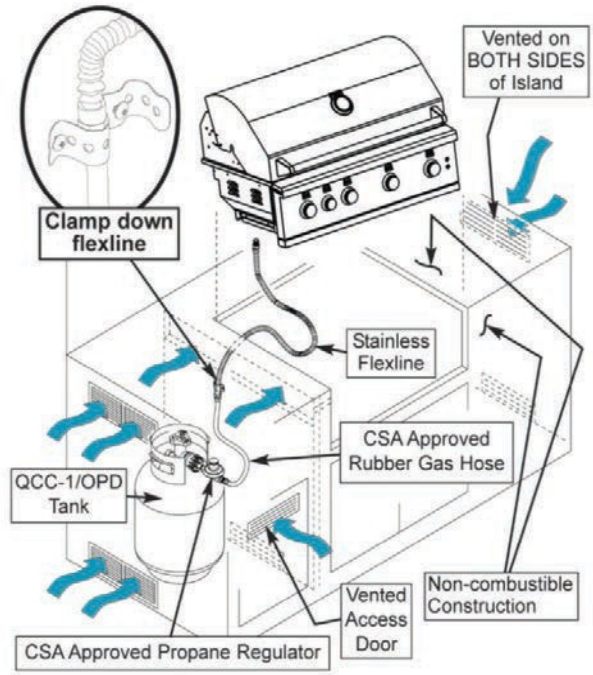

INSULATED SLEEVE INSTALLATION INSTRUCTIONS

IMPORTANT: Before you build the frame, you must take into consideration the total weight of the sleeve, grill and any finishing materials.

Review the table on the next page for the proper framing dimensions for the insulation sleeve. Determine the entry point for both the gas inlet and electric connections. Make the 4" square holes for gas and electrical connections (rear or bottom access) based on your requirements. Note that the gas and electrical connections are located on the right side.

A “Level” should be used to assure that the framing is level, both front to back and side to side.

NOTE: Never under any circumstance should you install the transformer or run a gas hose in between the grill and the inside of the insulating sleeve.

SLEEVE INSTALLATION

Position the sleeve into the frame. No part of the enclosure can protrude above the top surface or in front of the face surface of the liner.

GRILL INSTALLATION

Use the proper equipment to support the grill. Place the grill into the sleeve and place it over the sleeve lip across the back and sides. The liner is designed to support the grill without additional fasteners.

FINISHING

If desired any gap remaining between the sleeve and the non-combustible enclosure may be filled with a non-combustible sealant.

Built-In Sleeve Dimensions

FOR COMBUSTIBLE INSTALLATIONS

	Model #	Cutout A	Cutout B	Cutout C	Cutout D	Cutout E	Cutout F
26" 2 Burner	BSG262	12 3/4	22 3/4	25 3/4	2 1/4	2 1/4	2 1/4
34" 3 Burner	BSG343	12 3/4	22 3/4	33 3/4	2 1/4	2 1/4	2 1/4
42" 4 Burner	BSG424	12 3/4	22 3/4	41 3/4	2 1/4	2 1/4	2 1/4

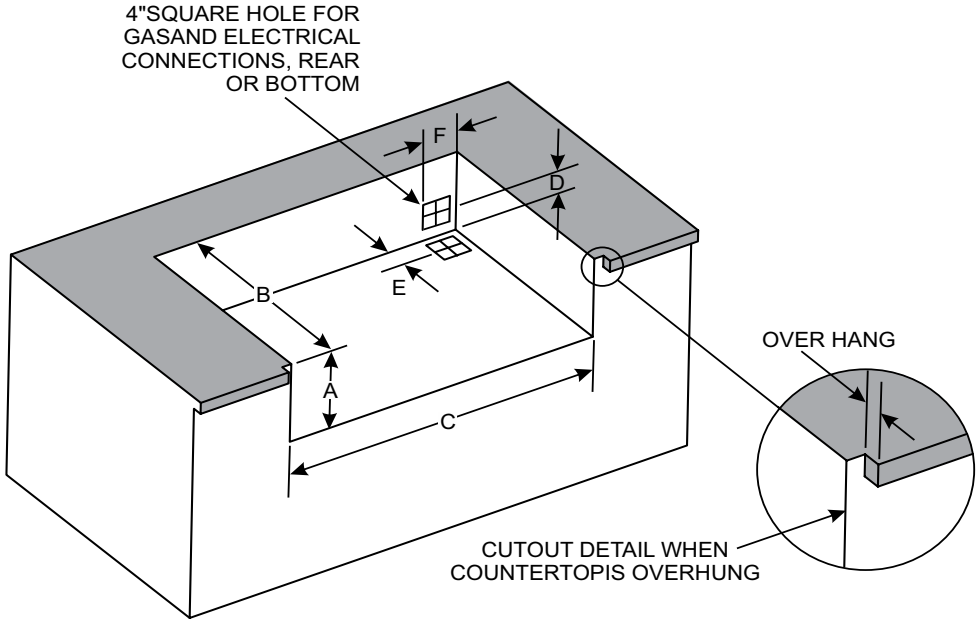

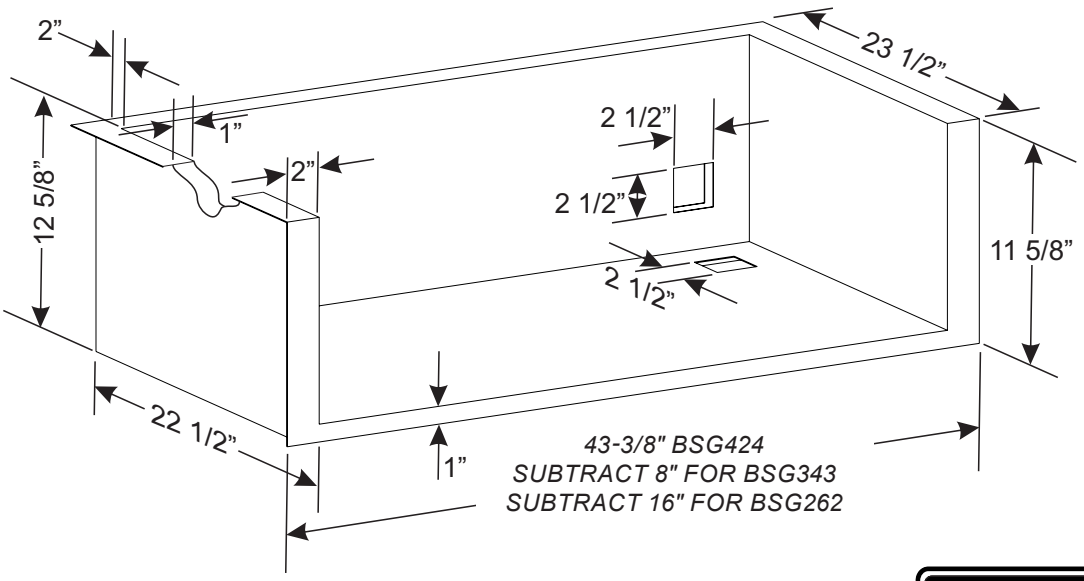

BROILMASTER®
PREMIUM GRILLS

Electrical Requirements And Hook-up

WARNING! ELECTRICAL GROUNDING

- Product installation must meet local electric codes or, in the absence of local codes, the latest edition of the National Electrical Code ANSI/NFPA No. 70 or the Canadian Electrical Code CGA 1.6b2005.
- Use only a Ground Fault Interrupter (GFI) protected circuit with this outdoor cooking gas appliance.
- This grill is equipped with a three prong (grounding) electric plug for your protection against shock hazard and must be plugged directly into a properly grounded three prong outlet. Never cut or remove the grounding prong from this plug.
- Use only extension cords with a 3 prong grounding plug, rated for the power of the equipment, and approved for outdoor use with a “W-A” marking.
- To protect against electric shock, do not immerse any part of the power cord, an extension cord or any plugs in water or other liquid.
- Unplug the product from the outlet when not in use and before cleaning. Allow it to cool before putting on or taking off parts.
- Do not let the cord touch hot surfaces.
- Do not use an outdoor cooking gas appliance for purposes other than intended.
- Do not operate any outdoor cooking gas appliance with a damaged cord, plug, or after the appliance malfunctions or has been damaged in any manner. Contact the dealer for repair.

WARNING

CALIFORNIA PROPOSITION 65

The electrical supply cord and plug of the Rotisserie and Transformer contain chemicals, including lead, known to the State of California to cause cancer, and birth defects or other reproductive harm. Wash hands after handling.

CAUTION

To protect against shock hazard risk, connect only to properly Grounded Outlet.

WARNING

This appliance, when installed, must be electrically grounded in accordance with local codes or, in the absence of local codes, with the National Electrical Code, ANSI/NFPA 70, or the Canadian Electrical Code, CSA C22.1. Keep any electrical supply cord and the fuel supply hose away from any heated surface.

Wiring Schematics

NOTE: This grill uses a transformer to provide power to the LED lights and work lights. The transformer should be secured to the island walls or cart back wall. Plug only into a Ground Fault Interrupter (GFI) protected circuit.

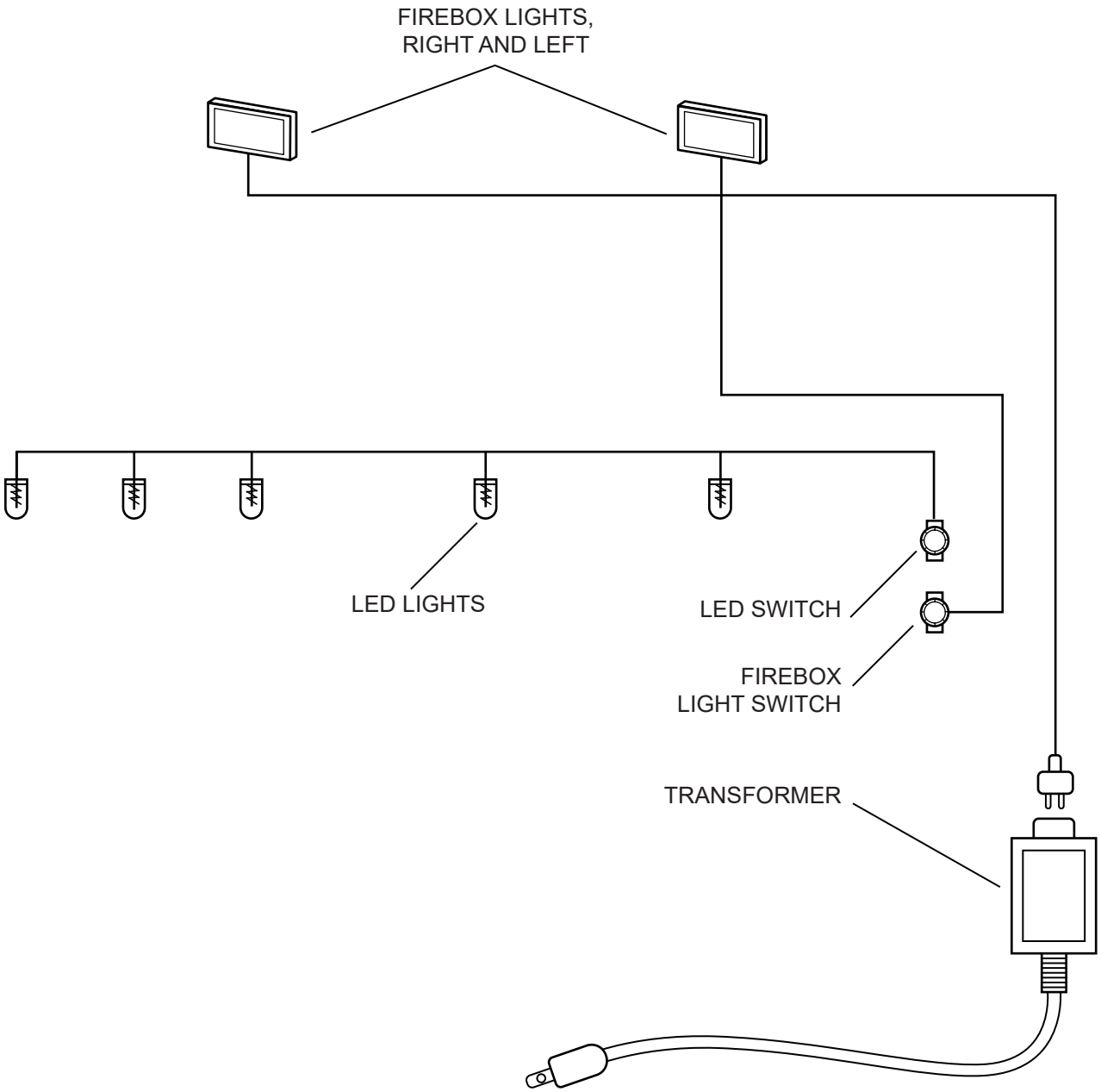

LP Gas Cylinder Safety

LP Gas grill models are designed for use with a standard 20lb. Liquid Propane Gas (LP Gas) tank (sold separately). Never connect your gas grill to an LP Gas tank that exceeds this capacity. A tank of approximately 12 inches in diameter by 18-1/2 inches high is the maximum size LP Gas tank to use. You must use an "OPD" gas tank which has a listed Overfill Prevention Device. This safety feature prevents tank from being overfilled which can cause a malfunction of the LP Gas tank.

The LP Gas tank must be constructed and marked in accordance with the Specifications for LP-Gas Cylinders of the U.S. Department of Transportation (D.O.T. or the National Standard of Canada, CAN/CSA-B339, Cylinders, Spheres and Tubes for Transportation of Dangerous Goods, and Commission; as applicable.

The LP Gas tank must have a shut-off valve, terminating in an LP Gas supply tank valve outlet, that is compatible with a Type 1 tank connection device. The LP Gas tank must also have a safety relief device that has a direct connection with the vapor space of the tank. The tank supply system must be arranged for vapor withdrawal.

The LP Gas tank must have a collar to protect the tank valve. Never connect an unregulated LP gas tank to your gas grill. The gas regulator assembly supplied with your gas grill is adjusted to have an outlet pressure of 11" water column (W.C.) for connection to an LP gas tank. Only use the regulator and hose assembly supplied with your gas grill.

Replacement hose and regulator assembly must be identical to those listed in the parts list of this Operator's Manual as specified by BROILMASTER.

Have your LP Gas dealer check the release valve after every filling to ensure it remains free of defects. Always keep LP Gas tank in upright position. Do not subject the LP Gas tank to excessive heat.

Never store an LP Gas tank indoors. If you store your gas grill in the garage always disconnect the LP Gas tank first and store it safely outside.

LP Gas tanks must be stored outdoors in a well-ventilated area and out of the reach of children. Disconnected LP Gas tanks must not be stored in a building, garage or any other enclosed area.

The regulator and hose assembly can be seen by opening the cart or island doors. They must be inspected before each use of the grill. If the hose is damaged in any way, it must be replaced prior to using the grill again.

The Gas Grill is setup to operate with a LP Gas Cylinder equipped with an OPD (Overfilling Prevention Device).

WARNING

Do not store a spare LP-Gas tank under or near this appliance. Never fill the tank beyond 80 percent full; and if the information is not followed exactly, a fire causing death or serious injury may occur.

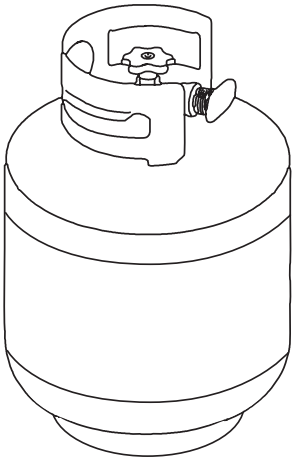

BROILMASTER®
PREMIUM GRILLS

Gas Requirements And Hook-up

LP GAS MODEL ONLY - TYPE 1 CONNECTION WITH REGULATOR AND HOSE TO YOUR LP GAS TANK.

Connect and tighten the swivel nut of the gas hose to the grill manifold shown below.

Turn all Control Knobs to the OFF position. Inspect the valve connection port and regulator assembly for damage or debris. Remove any debris. Never use damaged equipment.

Connect the regulator assembly to the tank valve and HAND TIGHTEN nut clockwise to a full stop. DO NOT use a wrench to tighten because it could damage the Quick Coupling Nut and result in a gas leak/fire hazard.

Open the tank valve a full turn (counterclockwise) and use a soapy water solution to check all connections for leaks before attempting to light your grill. See "Check All Connections for LP Gas Leaks." If a leak is found, turn the tank valve off and do not use your grill until the leak is repaired.

CHECK ALL CONNECTIONS FOR LP GAS LEAKS.

Never test for leaks with an open flame. Prior to first use, at the beginning of each season, or every time your LP Gas tank is changed, you must check for gas leaks.

FOLLOW THESE THREE STEPS:

1. Make a soap solution by mixing one part liquid detergent and one part water.
2. Turn the grill Control Knobs to the full OFF position, then turn the gas ON at source.
3. Apply the soap solution to all gas connections. If bubbles appear in the soap solution the connections are not properly sealed. Check each fitting and tighten or repair as necessary.

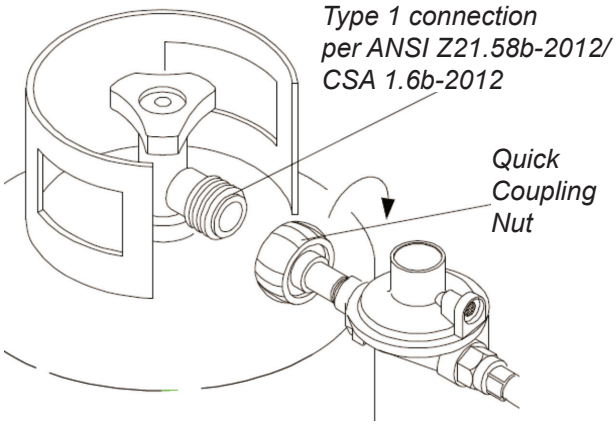

NOTE: *No Appliance Regulator Is Used When An LP Tank And Type 1 Connector And Regulator Are Used.*

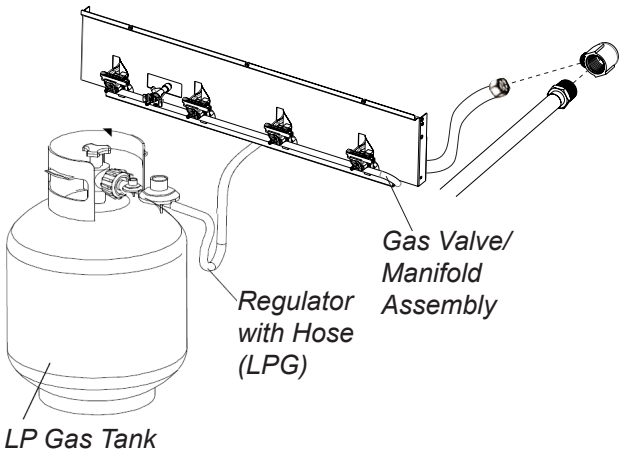

Gas Requirements And Hook-up (Cont'd.)

CAUTION: When the appliance is not in use the gas must be turned off at the tank. Place dust cap on cylinder valve outlet whenever the cylinder is not in use. Only install the type of dust cap on the cylinder valve outlet that is provided with the cylinder valve. Other types of caps or plugs may result in leakage of propane.

WARNING

1. Do not store spare LP cylinder within 10 feet (3m) of this appliance.
2. Do not store or use gasoline or other flammable liquids and vapors within 25 feet (8m) of this appliance.
3. When cooking with oil/grease, do not allow the oil/grease to get hotter 350°F (177°C).
4. Do not leave oil/grease unattended.

WARNING

If you have a gas leak that cannot be repaired, turn off the gas at the source and disconnect the fuel line from your grill. Call your gas supplier or fire department for repair assistance.

DISCONNECTING A LIQUID PROPANE GAS (LPG) TANK FROM YOUR GRILL

1. Make sure the Burner Valves and LP Gas tank valve are off. (Turn clockwise to close.)
2. Detach the hose and regulator assembly from the LP Gas tank valve by turning the Quick Coupling Nut counterclockwise.
3. Do not use a wrench or any tools when turning the Quick Coupling Nut.

WARNING

Failure to read and follow the Use and Care Instructions could result in a fire or explosion that could cause serious bodily injury, death, or property damage.

Gas Requirements And Hook-up (Cont'd.)

CONNECTING TO A PERMANENTLY PLUMBED GAS LINE

Follow the diagrams below when connecting gas to your grill from a natural gas line or a permanently plumbed hard piped LP connection.

NOTE: When using a portable cart mounted grill, the use of a 12ft. Q.C. Hose is recommended from grill to gas supply.

Whether the grill is built-in to a permanent structure, the use of a S/S Flex-Line is recommended from grill to gas supply.

Connect the Swivel nut of the flex-line or 12' Natural Gas Hose to the horizontal fitting of the regulator as shown and connect the other end to the gas supply line from your home. Read and follow the "Gas Safety Instructions" on page 22.

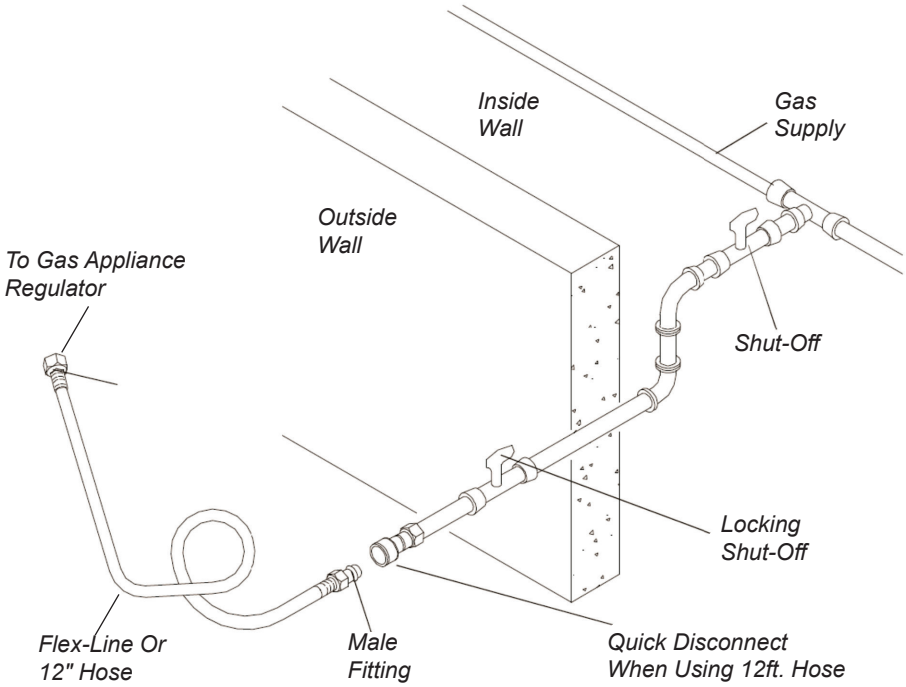

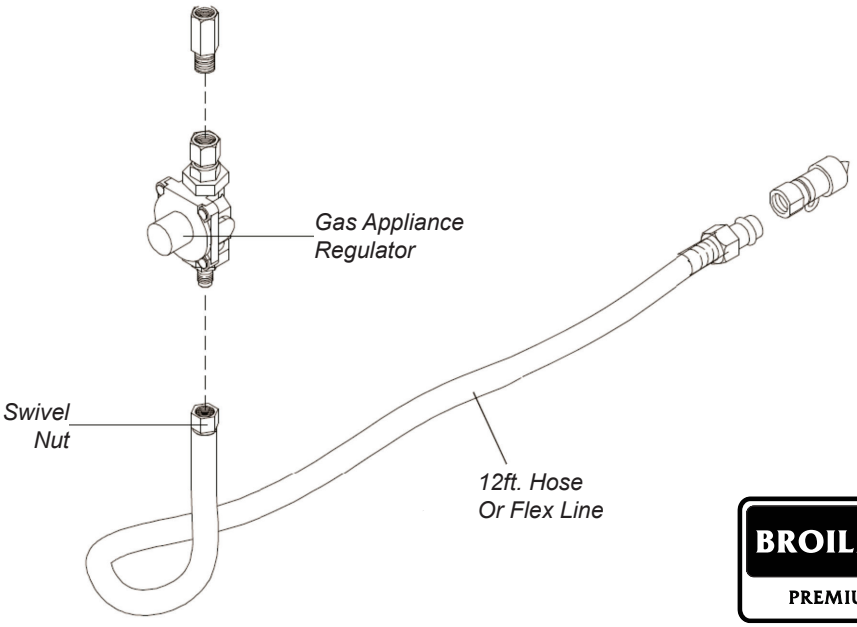

Gas Requirements And Hook-up (Cont'd.)

GAS SAFETY INSTRUCTIONS

Your natural gas grill is designed for use with natural gas (NG) or LP gas. The gas pressure Regulator supplied with this appliance must be installed and used on your grill. The unit and Regulator are set to operate with an outlet pressure of 4" W.C. for NAT gas. When using LP gas, the regulator and grill orifices must be connected to LP gas. (See converting your gas grills section).

Install a Shut-Off Valve at the gas supply source outdoors at a point after the gas pipe exits the outside wall and before the flex-line or quick-disconnect hose. Or install it at the point before the gas line piping enters the ground.

Pipe sealing compound or pipe thread tape resistant to the action of natural gas must be used on all male pipe thread connections.

Disconnect your gas grill from fuel source when the gas supply is being tested at high pressures.

This gas grill and its individual shutoff valve must be disconnected from the gas supply pipe system during any pressure testing of that system at pres-sure in excess of 1/2 psi (3.5kpa). Turn off your gas grill when the gas supply is being tested at low pressures. The grill must be isolated from the gas supply pipe system by closing its individual manual shutoff valve during any pres-sure testing of the gas supply pipe system at pressures equal to or less than 1/2 psi (3.5kpa).

CHECK ALL CONNECTIONS FOR GAS LEAKS

Never test for leaks with an open flame. Prior to first use and at the beginning of each season, you must check for gas leaks. Follow these three steps:

1. Make a soap solution by mixing one part liquid detergent and one part water.
2. Turn the grill Control Knobs to their full OFF positions. Next, turn the gas ON at the source.
3. Apply the soap solution to all gas connections. If bubbles appear in the soap solution the connections are not properly sealed. Check each fitting and tighten or repair as necessary.

Important Grilling Safety Information

1. **ALWAYS ENSURE THAT SOMEONE IS AT THE GRILL AT ALL TIMES.**
2. Prior to using grill ensure that all tie down wires have been removed from burners. Never operate the grill in a windy area.
3. Avoid wearing loose-fitting garments or long sleeves while using the grill. Never touch the grill racks, hood or immediate surrounding metal surfaces with your bare hands as these areas become extremely hot during use and could cause burns.
4. Use an insulated glove or mitt when opening and operating the grill. Open grill lid slowly to allow heat and smoke to escape before fully opening.
5. Never lean over hot grill surface or look directly into the grill when attempting to light. The grill hood must be fully opened when lighting.
6. Do not heat unopened food containers as pressure build-up may cause container to burst.
7. Do not use aluminum foil to line grill racks or drip pans. This will alter combustion airflow or trap excessive heat in the control area. This can result in melted knobs and ignition modules. Never cover or block grilling area with any type of pots and/or pans. These damages are specifically excluded from your warranty.
8. Never use charcoal in this gas grill.
9. Be aware that cooking excessively fatty meats and other such products will cause flare ups. Internal fires or damage caused by flare-ups or the grill being left unattended while cooking, are not the responsibility of Empire Comfort Systems and any resulting damage is not covered under the terms and conditions of our warranty.
10. Never grill without the drip pan in place. The drip pan must be pushed all the way to the back of the grill. Without the drip pan in place, hot grease could leak downward and produce a fire or explosion hazard.
11. Grease is extremely flammable. Let hot grease cool down before attempting to handle or dispose of it. The drip tray should be cleaned of grease on a regular basis.
12. Do not use the grill until a leak check has been performed
13. Do not operate grill under the influence of alcohol or drugs

BROILMASTER®
PREMIUM GRILLS

Converting Your Gas Grill

Your BROILMASTER Gas Grill comes equipped to be converted to the opposite gas. Each grill comes "GAS SPECIFIC", and packed with a gas conversion kit. On the side of the GAS BBQ there will be a rating plate that specifies the "GAS TYPE" and orifice size as well as contains your SERIAL NUMBER for your warranty.

HOW DO I CONVERT MY GRILL GAS TYPE?

A professional plumber or gas grill professional should be used to convert your gas grill. An conversion Orifice kit is included in your grill.

GAS PROFESSIONAL INSTALLERS

Main Burners

1. You must remove all cooking grids, vaporizors and dividers to see the main burners in the appliance.
2. On the back rear of each burner is a pin. Remove pin with a needle nose pliers.
3. To remove burner, pull burner upwards and slide burner toward the rear of the appliance. Repeat this process for each burner.
4. Where the burner was previously located, sitting over the main valve orifice through the hole in the front basin should now be empty space where you can see the orifice.
5. Inside the space, you will find the end of the valve with an orifice (brass fitting) screwed into the end of the valve stem. The orifice can be easily removed.
6. Carefully remove the orifice with a 6mm socket set and extension. The orifices are brass, so be cautious not to strip.
7. Once the old orifice is removed, replace it with the new orifice provided with each gas grill.
8. Replace burners and pins making sure that the orifices are inside and centered in the burner tubes.
9. For converting to LP, attach the provided brass elbow to the gas manifold fitting. You will need to purchase an LP hose and regulator (Empire part number B069756) to connect the LP tank to the brass elbow.

Rear Burner

1. Remove 2 screws on each side of the cover, then remove the rear cover from the back of the firebox.
2. Remove the orifice.
3. Replace the orifice with the new orifice provided with each gas grill. See rating plate chart for size on page 39.
4. Replace rear cover.

Adjust Main Burner And Air Shutters

1. Light each burner and inspect burners for proper flame appearance.
2. The best flame appearance is a blue flame with yellow tip.
3. There is an air shutter found at the end of the main burner Venturi, which can be either opened or closed to make adjustments to the flame's appearance. The Air Shutter can be adjusted by loosening the screw and opening the air shutter, then closing it slowly until the flame starts to yellow. STOP and turn back 1/16", then tighten the screw. The flame should be blue with yellow tips.

Converting Your Gas Grill (Cont'd.)

LOW HEAT ADJUSTMENT

The valves on the grill feature an adjustable low setting. Due to fluctuations in gas pressure, heating value or gas conversion, you may feel it necessary to adjust gas flow in the low position. Do not adjust the infrared rear rotis or optional Sear burner. When doing this adjustment you will be wanting a Blue Flame with a Yellow Tip. Adjust the Valve to obtain this flame.

1. Light the burner.
2. Turn the control knob to the lowest setting (all the way counterclockwise). Remove the knob.
3. Insert a small thin flat tipped screwdriver into the adjustment screw hole and while viewing the burner flame, adjust to a minimum stable flame. Increase to left and decrease to right.

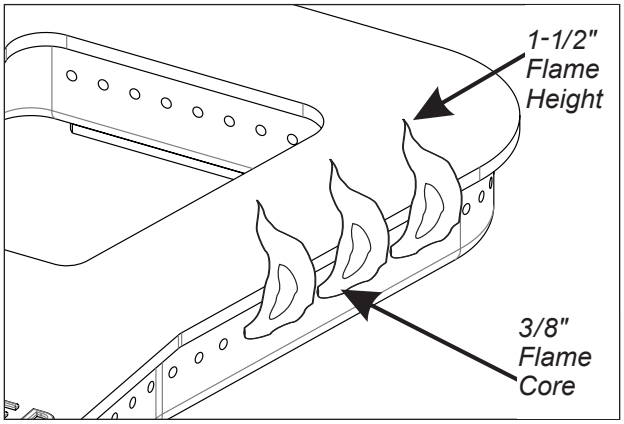

A. Remove knob.

B. Locate screw.

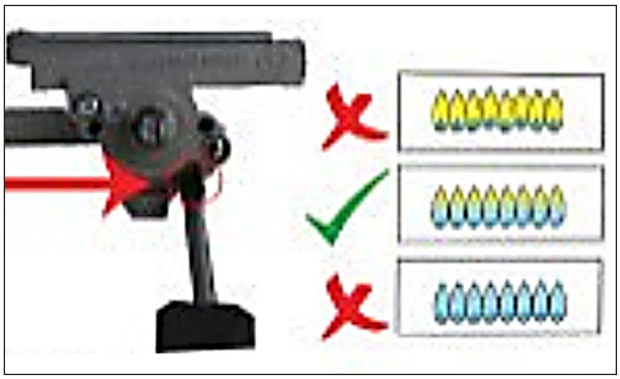

C. Adjust flame.

Converting Your Gas Grill Gas Type

MAIN BURNER ORIFICE CHANGE

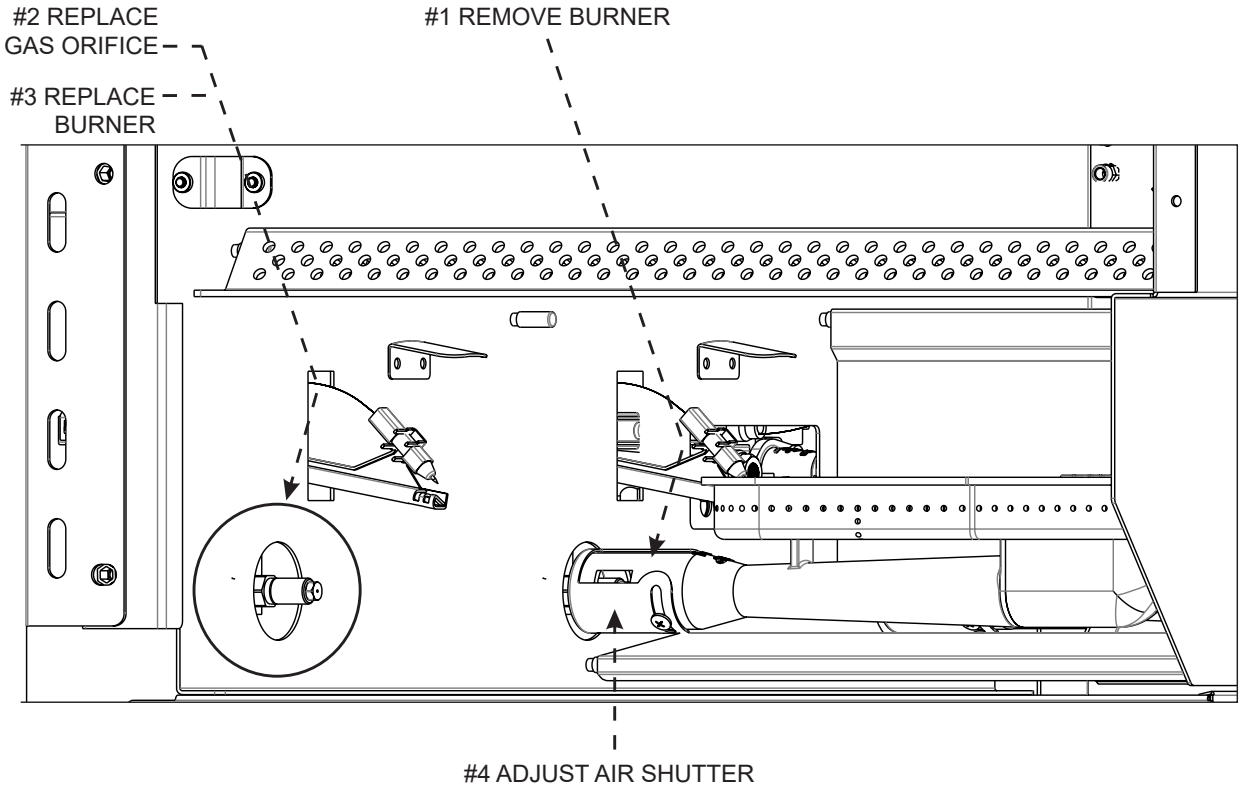

REAR BURNER ORIFICE CHANGE

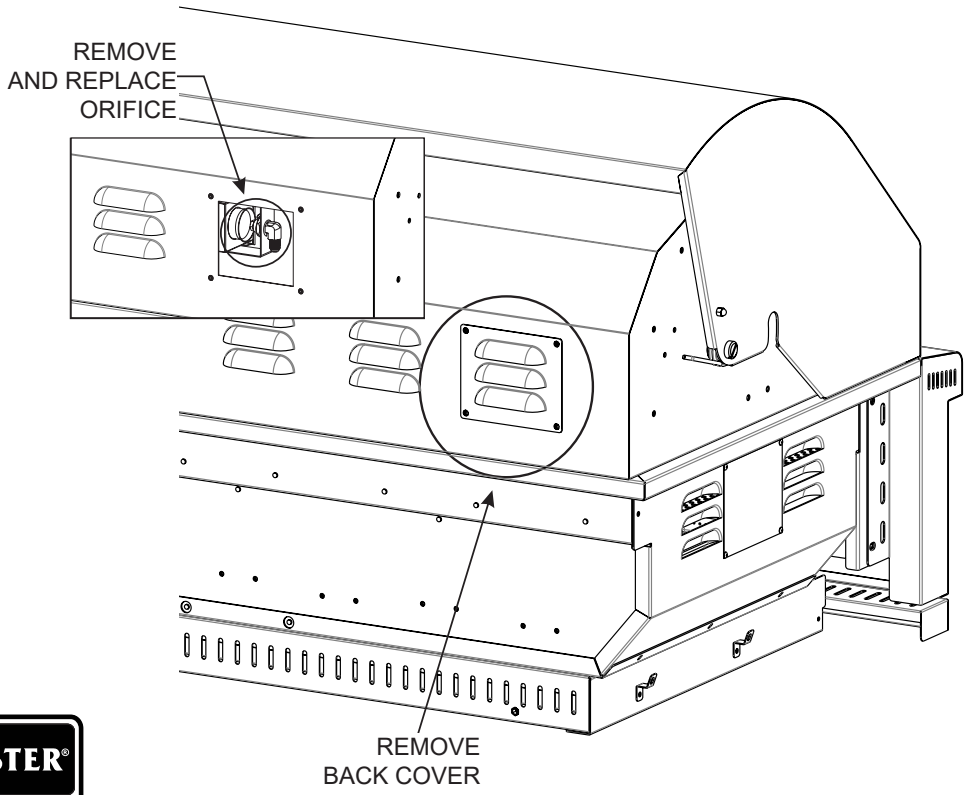

BROILMASTER®
PREMIUM GRILLS

Regulator Gas Conversion

These instructions describe how to convert a Maxitrol regulator to use either natural gas (NAT- 4") or liquid propane gas (LPG-11")

1. Carefully remove the top brass nut cap from the regulator
2. Remove brass nut cap and review the small Plastic piece inside the regulator
3. Remove Plastic Piece and turn to the GAS TYPE that you are converting to (see diagram) The plastic piece is clearly market LP or NG.
4. Replace brass top onto the regulator

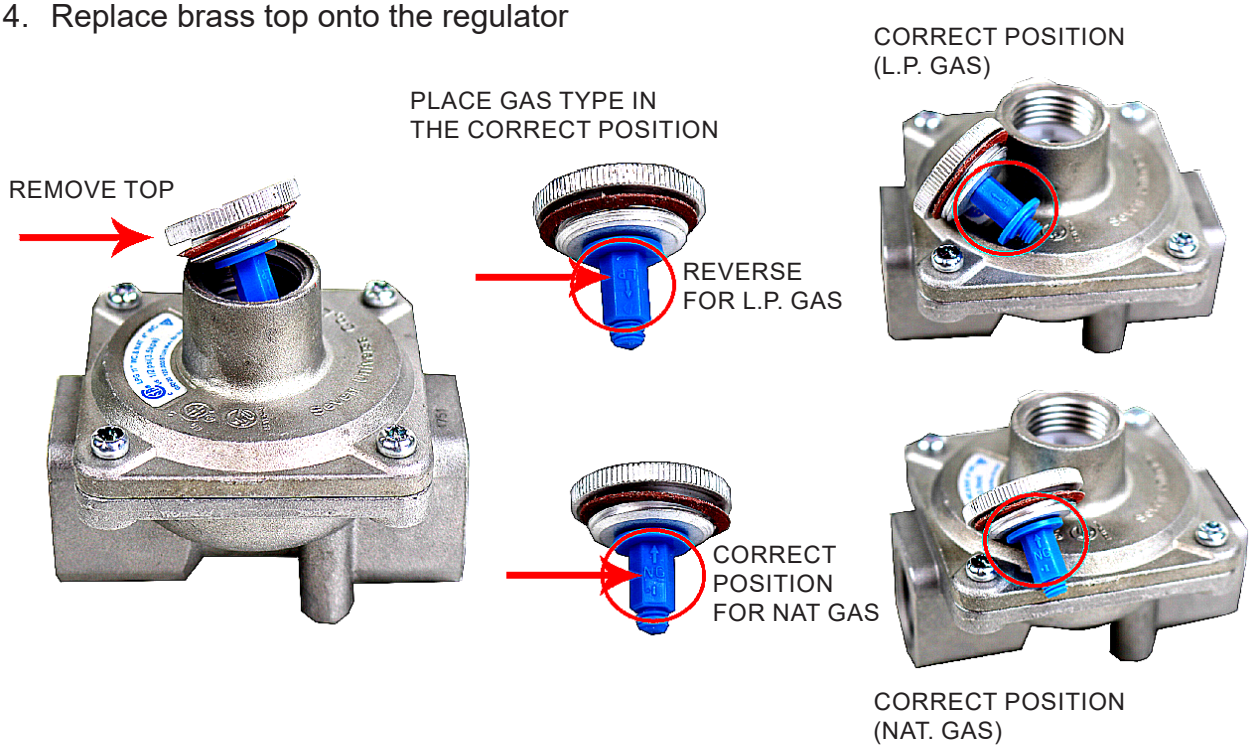

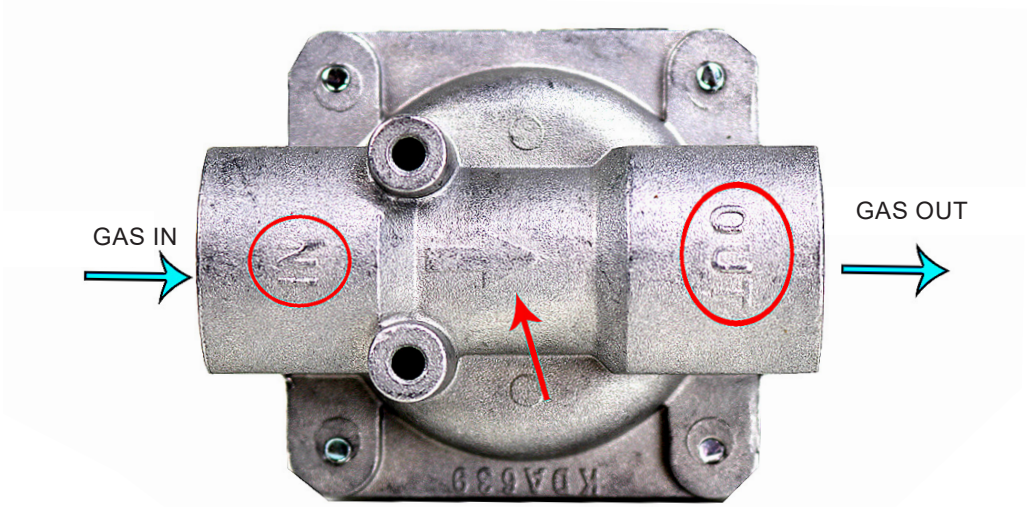

UNDERNEATH OF THE REGULATOR

Lighting The Burners

LIGHTING THE MAIN GRILL BURNERS:

1. Open BBQ hood . DO NOT ATTEMPT TO LIGHT GRILL WITH THE HOOD CLOSED.
2. Check to ensure that all burner control knobs are set to OFF.
3. Turn on main gas supply.
4. Push burner knob in, turn slowly counterclockwise until gas begins to flow and hold for 2 seconds. Continue turning to the "HIGH" position. You should hear the "CLICK" and the burner will ignite. Release knob.
5. If burner does not light, turn knob to OFF, wait 5 minutes to allow gas to dissipate, and repeat step 4 above.

LIGHTING THE BACK INFRARED BURNER:

1. Open hood completely. Do not attempt to light grill with the hood closed. Ensure warning rack is removed.
2. Load food onto skewer, and install brackets, motor and skewer onto grill in desired cooking position.
3. Check to ensure that all burner control knobs are set to OFF.
4. Turn on main gas supply.
5. Push in and turn knob 1/4 turn counter clockwise to hear the click to ignite the back burner. When the burner ignites continue to hold in knob for 30 seconds and then release.
6. If burner does not light, turn knob to OFF, wait 5 minutes to allow gas to dissipate, and repeat step 5 above.

PREHEATING THE GRILL

Before cooking, always preheat the grill for best results. To preheat the grill, light all main burners and set to HIGH. Close the grill hood and allow to preheat for 10-15 minutes, or until the grill reaches desired temperature.

After preheating, turn off all burners not required, carefully open the hood, and adjust remaining burners to desired temperature.

Do not leave the grill unattended during the preheat cycle or at any time while the grill is in use. Do not allow grill to preheat for prolonged periods of time. Overheating the grill can cause damage to the grill and personal property.

This BROILMASTER Gas Grill has a "flame out" ignition system located on the rear Burner. This ignition system will automatically switch the gas supply off if the burner is blown out in a windy condition.

Allow the ignition Safety Thermocouple to cool down before trying to relight the back burner.

Note if you are in an extremely windy condition please try and protect the grill from direct wind to the grill front and back.

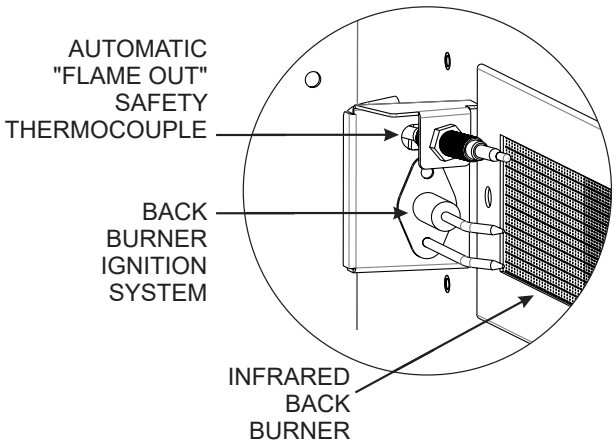

BROILMASTER®
PREMIUM GRILLS

Manually Lighting The Grill

1. Open the hood and wait five minutes allow any accumulated gas to dissipate.
2. Keep your face as far away from the burners as possible.
3. Light and insert a long-stem match, holding it near the Lighting Tube on the right side.
4. Slowly rotate the burner knob counter-clockwise to the high position.
5. If the burner does not light after five seconds, turn the control knobs to the OFF position and wait five minutes until the gas clears before attempting to re-light.
6. If the burner does not light after several attempts, immediately close all gas valves and consult an authorized service technician.
7. To shut off the burners, rotate the knob and turn to OFF.
8. It is normal to hear a popping sound when the burners are turned off.

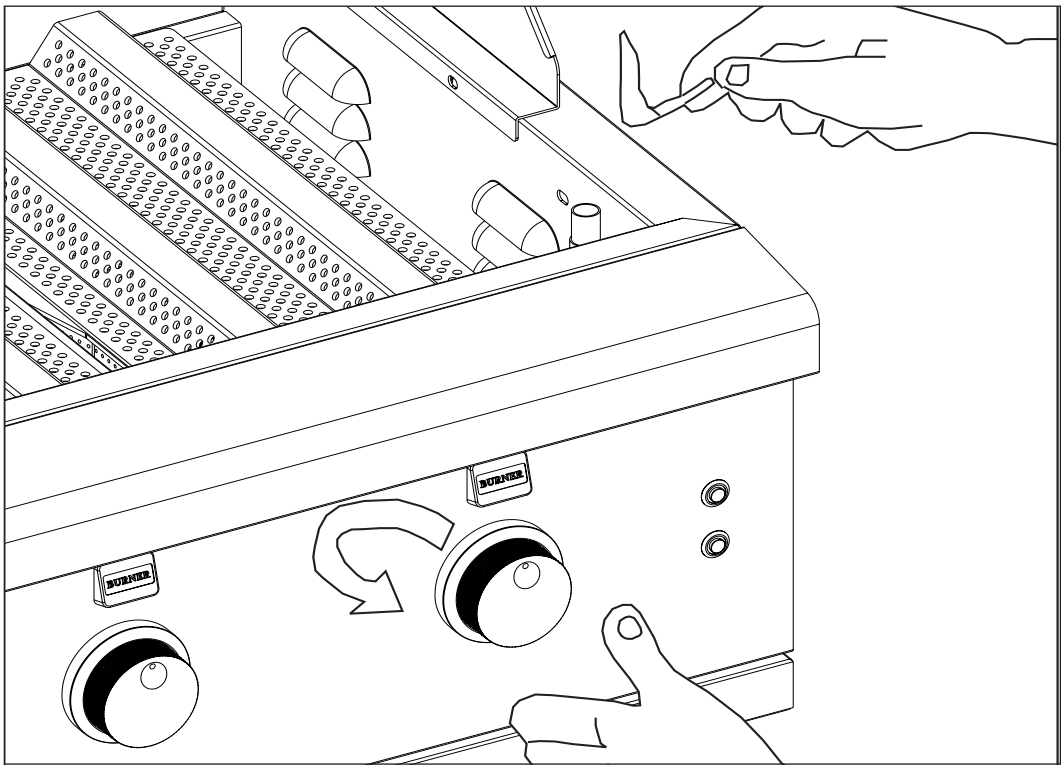

WARNING

Never lean over the grill cooking area while lighting your gas grill. Keep your face and body a safe distance (at least 18 inches) from the front of grill when lighting your grill by match.

WARNING

Do not use standard matches or cigarette lighters to perform match-lighting procedures. Serious burns can occur and lighters can explode.

BROILMASTER®
PREMIUM GRILLS

Burner Type Identification

Your BROILMASTER grill comes standard with a Cast Stainless Steel bowtie burner. Optional Burners are available and the operation of each burner type varies, so it is important to familiarize yourself with them.

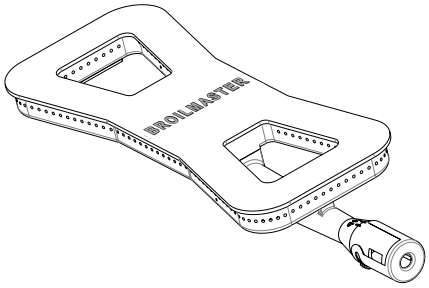

BOWTIE BURNER - This is the standard main grill burner found under the vaporizers.

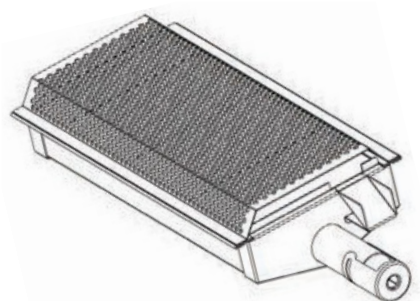

SEAR BURNER - This is a high intensity infrared burner that is optional on all models.

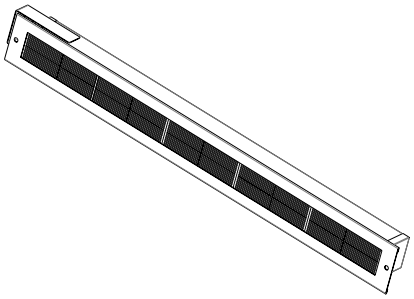

ROTISS BURNER - This is an infrared burner found in the rear of the grill above the grill racks. (Standard on 34" and 42" models.)

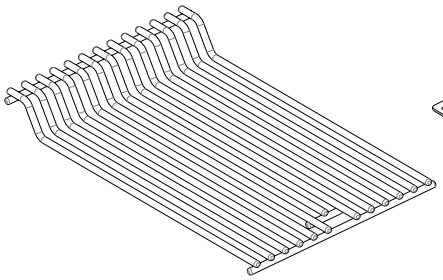

COOKING GRIDS -
Dual-Level Cooking Surface

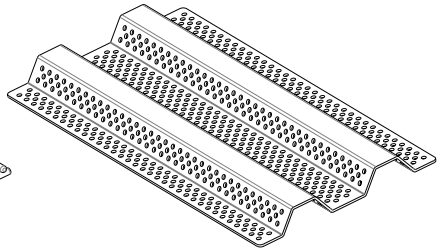

VAPORIZER - Even Heat Vaporizering System

Using the BROILMASTER Grill

This BROILMASTER grilling requires high heat for searing and proper browning of your food. Most direct foods are cooked at the high heat setting for the entire cooking time (with the lid open). However, when grilling large pieces of meat or poultry, it may be necessary to turn the heat to a lower setting after the initial browning. This cooks the food through without burning the outside. Foods cooked for a long time or foods basted with a marinade may need a lower heat setting near the end of the cooking time.

HOW TO SEAR

When you use the sear burner it locks in flavor and juices while allowing the outer surface to absorb smoke and food aroma that is produced as grease and drippings are vaporized. The result is a crisp, flavorful outside with a tender, juicy inside and a sear infrared burner is specifically designed for this purpose.

Direct Cooking Method

Direct cooking involves placing food on grates over direct heat Burners. Use this method for foods that take less than 20 minutes to cook or to sear larger items at the start of the cooking process that will then be indirectly cooked to finish. Place items on the preheated surface and leave until they no longer stick.

Turning too soon and too often is one of the most common grilling mistakes. Use a meat thermometer to achieve desired doneness and remove items one degree below how you would like to enjoy them, as the resting period before carving or consuming will raise the temperature.

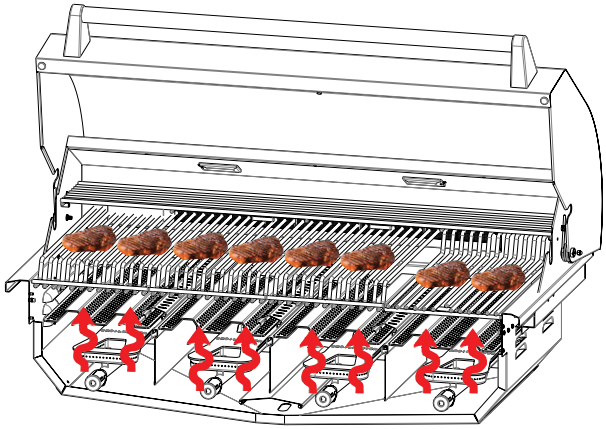

Indirect Cooking Method

Indirect cooking method is a popular alternative to direct heat grilling. Indirect cooking uses heat from adjacent burners to cook food and, in many cases, reduces the possibility of overcooked or overly browned food. Foods most appropriate for indirect grilling included breads, thicker pieces of chicken or roasts. Indirect cooking involves placing the food on grates where the burners below are not lit and then closing the grill top to create an oven effect. All the items you usually oven-roast can be grilled to perfection using indirect heating. Preheat the burners surrounding the food to be cooked. Use your basting pan below to hold food and add water or marinaid to the pan to prevent the natural juices from burning or evaporating. Place pan on the vaporizers directly under the food above.

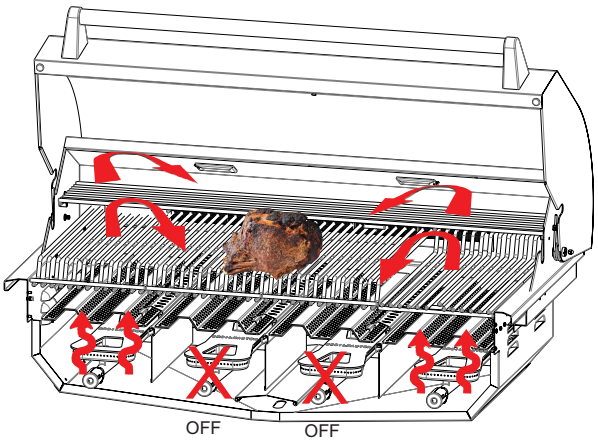

Using The Rotisserie (Optional Accessory)

THE BROILMASTER IR rotisserie system consists of three main parts - the motor, the skewer which holds the food, and the infrared rotis back burner. The rotisserie evenly cooks large cuts of meat by turning them continuously in front of a high heat burner. The rotis is capable of turning up to a 25 lb. cut of meat. Make sure the rotis motor is not straining when turning the meat / chicken.

THE MOTOR - The rotisserie motor runs on 110 power that has its own power supply. To power the motor, plug into a 110 power outlet or use a outdoor extension cord. Install the motor onto the grill by sliding it onto the bracket located on the left or right side of the grill. (Bracket is removable and universal for each side)

THE SKEWER - To load the skewer with food, slide one of the meat holders onto the skewer. Push the skewer through the center of the food, then slide the second meat holder onto the skewer. Center the food to be cooked on the skewer then push the meat holders firmly together. Tighten the thumb screws (use pliers if necessary). It may also be necessary to wrap the food with cooking string to secure any loose portions.

WARMING RACK - Remove the warming rack and, if needed, remove the grill racks to gain better clearance. It is normal for the skewer to flex when cooking large foods. Place a cooking pan with water or marinaid beneath the food for basting and to ease cleaning.

THE INFRARED REAR BURNER - The location of the rotis burner makes it more susceptible to strong wind conditions (more so than the main grill burners). For this reason you should avoid operating the rotis cooking during windy conditions. As an added safety feature, the burner is equipped with an automatic safety valve which will not allow gas to flow to the rotis burner if it is not properly lit or goes out.

Cooking Tips

COOK FOOD TO PROPER TEMPERATURES

Cooking food safely requires that you raise the internal temperature of the meat high enough and for a long enough period of time to kill any food-borne bacteria that may cause illnesses.

Color is not the best indicator that food is safe to eat. Use a high-quality probe thermometer to be sure your food is properly cooked. Place the tip of an instant-read thermometer into the center of the thickest part of the food but at least 1/2 inch deep. Read the temperature after about 10 seconds. Follow the temperature guidelines for the type of food you're cooking.

The following guidelines are from the U.S. Food and Drug Administration Center for Food Safety and Applied Nutrition.

COOK TO INTERNAL TEMP			
Meat And Poultry	**Medium Rare**	**Medium**	**Well Done**
Fresh Beef - Medium Rare	145°F	160°F	170°F
Ground Turkey, Chicken	165°F		
Ground Veal, Beef, Lamb, Pork	145°F with 3 minutes of rest and then turn		
Fresh Pork - Medium	–	160°F	170°F
Chicken - Whole	165°F		
Turkey - Whole	165°F		
Poultry Breasts, Roast	165°F		
Poultry Thighs, Wings	165°F		
Stuffing (Cooked Alone Or In Bird)	165°F		
Duck And Goose	180°F		
Fresh Veal - Medium Rare	160°F		
Fresh Lamb - Medium Rare	145°F	160°F	170°F
Ham - Fresh (Raw)	145°F	160°F	170°F
Ham - Pre-Cooked (Reheat)	140°F		
SEAFOOD			
Fish	Cook until flesh turns opaque and flakes easily with a fork.		
Shrimp, Lobster, Crab	Cook until shells turn red and flesh becomes pearly opaque.		
Scallops	Should turn milky white or opaque and firm.		
Clams, Mussels, Oysters	Cook until shells open.		

*The above temperature settings are a guide, the temperatures may vary due to wind and outside ambient temperatures.

Burner Cleaning And Adjustment

Before removing burners ensure the gas supply is off and the knobs are in the “off” position. Make sure the grill has completely cooled before proceeding.

TO REMOVE BURNERS:

Remove the grill racks, vaporizers and zone dividers. Remove the pin holding the burner in place. Grasp the burner, pull it up and slightly to the rear of the unit, so the burner head comes off the brass orifice at the front and remove. Be careful not to upset the air shutter position.

BURNER CLEANING:

To maximize grill performance, clean the exterior of the burner with a wire brush. Clear stubborn scale with a metal scraper. Clear any clogged ports with a straightened paper clip. Never use a wooden toothpick as it may break off and clog the port. Shake out any debris through the air shutter. Use a flashlight to inspect the burner inlet to ensure it is not blocked. If obstructions can be seen, use a metal wire coat hanger that has been straightened out to clean.

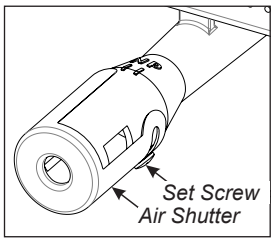

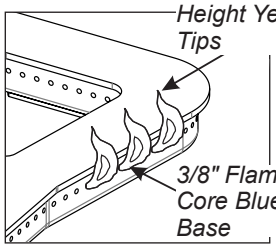

BETTER AIR ADJUSTMENT:

Each grill burner is tested and adjusted at the factory prior to shipment; however, variations in the local gas supply or a conversion from one gas to another may make it necessary to adjust the burners. The flames of the Grill burners should be visually checked, adjusting the air shutter by opening the air shutter and slowly closing it until the flame starts to yellow. STOP and turn back 1/16", and tighten the screw. Flame should be blue with yellow tips when adjusted correctly.

WARNING

It is critical to center every burner on its orifice.

WARNING

For safe operation, make sure the Orifices are inside the Burner Tubes before using your grill. (See figure below). If the Orifice is not inside the Burner Tube, lighting the Burner may cause explosion and/or fire resulting in serious bodily injury and/or property damage.

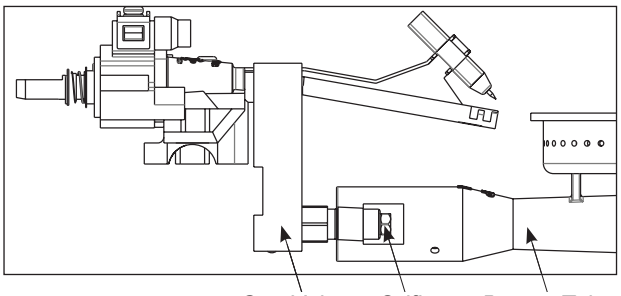

Please Note that the air mixture for LP gas and NG is different. Your gas BBQ will come preset for your gas type. If you find that you are not getting the best flame you can adjust the air shutter and the O2 mix with gas will change the flame. The flame coming from your burner is extremely important. If the flame is not correct you will be able to adjust the flame as described in the section above.

WARNING

Spiders and small insects can spin webs and nest in the grill burner ventures which can lead to a gas flow obstruction resulting in a fire in and around the burner tubes. This type of “FLASHBACK FIRE” can cause serious grill damage and create an unsafe operating condition for the user.

To reduce the chance of FLASHBACK FIRE you must inspect and clean the ventures at least twice a year in summer and fall or whenever spiders are active in your area, and if your grill has not been used for an extended period of time.

Remove the pin from the rear of each Main Burner using needle-nose pliers. Carefully lift each Burner up and away from the Gas Valve Orifice. Check and clean Burner/Venturi Tubes for insects and insect nests. A clogged tube can lead to a fire beneath the grill.

FOR CLEANING, REFER TO METHODS 1-3 BELOW:

METHOD 1: Bend a stiff wire or wire coat hanger into a small hook as shown and run the hook through the Burner Tube and inside the Burner several times to remove debris.

METHOD 2: Use a bottle brush with a flexible handle and run the brush through the Burner Tube and inside the Burner several times to remove any debris.

METHOD 3: Use an air hose to force air through each Burner Tube. The forced air should pass debris or obstructions through the Burner and out the Ports.

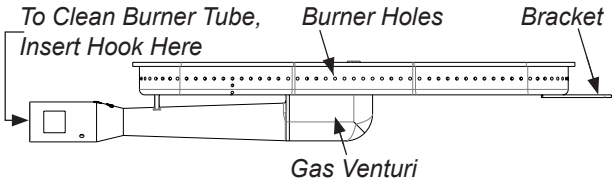

WARNING

For safe operation ensure the Gas Valve Assembly Orifice is inside the Burner Tube before using your grill. (See figure above). If the Orifice is not inside the Burner Tube, lighting the Burner may cause explosion and/or fire resulting in serious bodily injury and/or property damage.

Cleaning The Grill

Proper care and maintenance will keep your grill in top operating condition and prolong its life. Follow these cleaning procedures on a timely basis and your grill will stay clean and operate with minimum effort. CAUTION: Be sure your grill is OFF and cool before cleaning.

CLEANING THE COOKING GRIDS - Before initial use, and periodically thereafter, wash your Cooking Grids in a mild soap and warm water solution. You can use a wash cloth or vegetable brush to clean your Cooking Grids.

CLEANING THE FLAME TAMERS - You should periodically wash the Flame Tamers in a soap and warm water solution. Use a vegetable brush to remove stubborn burnt-on cooking residue. Dry the Flame Tamers thoroughly before you reinstall them into the grill.

CLEANING THE GREASE TRAY - To reduce the chance of fire, the Grease Tray should be visually inspected before each grill use. Remove any grease and wash Grease Tray with a mild soap and warm water solution.

CLEANING THE INSIDE OF THE GRILL LID - Grease can build up on the inside of the Grill lid over time. This grease can drip onto your deck or patio when the lid is opened. Visually inspect the inside of the Grill Lid before each grill use. Remove any grease and wash with a mild soap and warm water solution.

ROUTINE CLEANING OF THE GRILL INTERIOR - Burning-off excess food after every cookout will keep it ready for instant use. However, at least every 6 months you must give the entire grill a thorough cleaning to minimize your risk of grease fire and keep the grill in top shape.

FOLLOW THESE STEPS:

1. Turn all Control Knobs to the full OFF position. Turn the LP gas tank valve to the full OFF position or turn off NAT gas supply.
2. Remove and clean the Vaporizers, Cooking Grids, Warming Rack, Zone Dividers and Grill Burners as above.
3. Scrape out and brush the inside and bottom of the grill with a scraper and fiber pad or nylon brush and wash with a mild soap and warm water solution. Rinse thoroughly and let dry.
4. Check each Orifice for obstruction.
5. Replace the Burners and adjust the Gas Collector Box. The edge of the collector box should be overlapping the Burner Port.
6. Replace Burner, Vaporizer, Zone Divider and Cooking Grids.
7. Reconnect the gas source and observe the Burner flame for correct operation.

Cleaning The Grill (Cont'd.)

CLEANING EXTERIOR STAINLESS STEEL SURFACES:

Routine care and maintenance is required to preserve the appearance and corrosion resistance of stainless steel. The fact is stainless steel can corrode, rust and discolor under certain conditions. Rust is caused when regular steel particles in the atmosphere become attached to the stainless steel surface. Steel particles can also become attached to your grill if you use steel wool or stiff wire brushes to clean the grill instead of non-abrasive cloth, sponge or nylon cleaning tools. In coastal areas rust pits can develop on stainless surfaces that cannot be fully removed. Bleach and other chlorine based solutions used for household and pool cleaning can also cause corrosion to stainless steel. Weathering, extreme heat, smoke from cooking and machine oils used in the manufacturing process of stainless steel can cause stainless steel to turn tan in color. Although there are many factors which can affect the surface appearance of stainless steel, they do not affect the integrity of the steel or the performance of the grill.

TO HELP MAINTAIN THE FINISH OF STAINLESS STEEL FOLLOW THESE CLEANING PROCEDURES FOR THE BEST RESULTS:

1. After every use (after your grill has cooled down), wipe stainless surfaces with a soft, soapy cloth or sponge then rinse with water.
2. Be sure to remove all food particles, sauces or marinades from stainless steel because these can be highly acidic and damaging to stainless surfaces. Never use abrasive cleaners, scrubbers or stiff wire brushes of any type on your grill.
3. Use a heat resistant Stainless Steel Cleaner and rub or wipe in the direction of the stainless steel grain or polish lines. Do not polish against the grain.

Light Bulb Replacement

DO NOT TOUCH THE GLASS OF THE NEW REPLACEMENT BULB.

Replace The Bulb

Replacement bulbs are halogen, 12 volt, 10W max, T3 type with a G4 bi-pin, and are readily available at most stores. The glass cover is held in place by two spring tension tabs. The bulbs are easily removable without the use of tools.

Simply grasp the glass lens at the outer corners, near the front tension clips and push the lens back.

Then, swing the lens down and pull it loose. You may have to loosen the screw to remove the lens.

Avoid touching the glass of a new bulb.

Halogen bulbs are very sensitive to the oils found in human skin. Touching the bulbs may shorten their life. Pull the bulb straight out from the socket without twisting. Hold the bulb using a paper towel or other cloth and gently press it straight into the socket. The glass cover should be gently snapped back into place.

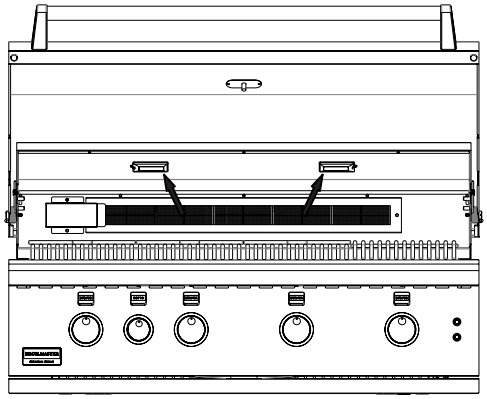

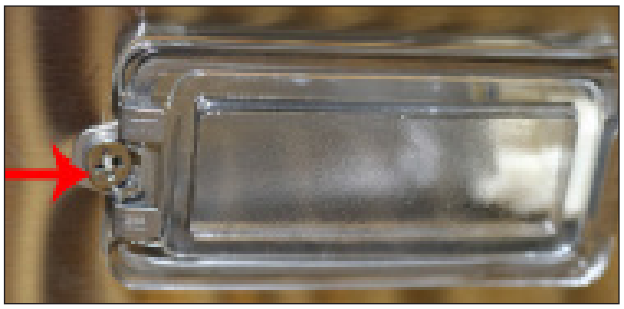

1. Remove screw

3. Remove bracket

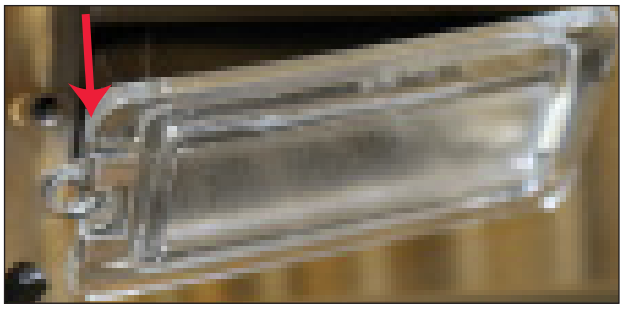

2. Pull from housing

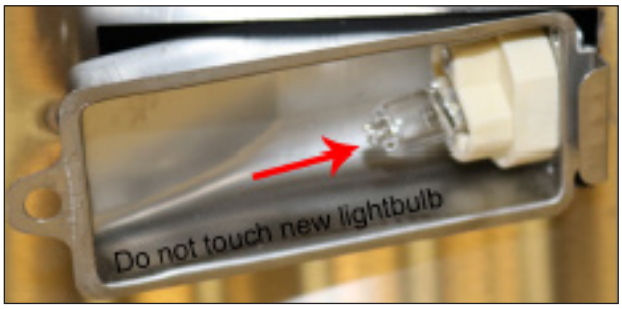

4. Replace light bulb
5. Reverse process to replace into housing

BROILMASTER Limited Warranty

WARRANTY TERMS FOR EMPIRE COMFORT SYSTEMS INC.

BROILMASTER Stainless Steel Gas Grills

Models: BSG324N, BSG343N, BSG424N

Empire Comfort Systems Inc. warranties this BROILMASTER stainless steel gas grill to be free from defects at the time of purchase and for the periods specified below. The grill must be installed by a qualified technician and must be maintained and operated safely, in accordance with the instructions in the owner's manual. This warranty applies to the original purchaser only and is not transferable. All warranty repairs must be accomplished by a qualified gas appliance technician.

Limited Lifetime Parts Warranty – Against Rust-Through
If the items listed below fail because of defective workmanship or material, Empire will repair or replace at Empire's option. The limited lifetime warranty provides one-time replacement of a covered component.

- Stainless Steel Grill Housing
- Stainless Steel Cooking Grids and Stainless Steel Griddles
- Select Stainless Steel Components – Carts, Cast Stainless Steel Bowtie Burners, Stainless Steel Drip Pans, Side Burners, Side Burner Housings, and Warming Rack
- Stainless Steel Built-In Components – Built-In Sleeves, Access Door and Drawer Kits, Coolers, Sinks, and Vent Register Kits

Limited Five-Year Parts Warranty – Against Rust-Through
If the items listed below fail because of defective workmanship or material, Empire will repair or replace at Empire's option.
Stainless Steel V-Grates, Flame Tamers, and Heat Zone Partitions
Infrared Burners (main and rear rotisserie)

Limited One-Year Parts Warranty
If the items listed below fail because of defective workmanship or material, Empire will repair or replace at Empire's option.

- Valves, knobs, ignitors, labels, hoses, fittings, and all other parts and accessories – including those made from stainless steel – unless specified above

Duties Of The Owner
The appliance must be installed by a qualified installer and operated in accordance with the instructions furnished with the appliance.
A bill of sale, cancelled check, or payment record should be kept to verify purchase date and establish warranty period.
Ready access to the appliance for service

What Is Not Covered
Damages that might result from the use, misuse, or improper installation or storage of this appliance.
Travel, diagnostic costs and freight charges on warranted parts to and from the factory.
Claims that do not involve defective workmanship or materials.
Unauthorized service or parts replacements.
Removal and reinstallation cost.
Inoperable due to improper or lack of maintenance.
The costs of a service call to diagnose a problem and labor for replacement or repairs.

How To Get Service
To make a claim under this warranty, please have your receipt available and contact your installing dealer. Provide the dealer with the model number, serial number, type of gas, and purchase verification. The installing dealer is responsible for providing service and will contact the factory to initiate any warranted parts replacements. Empire will make replacement parts available at the factory. Shipping expenses are not covered.

Your Rights Under The Law
This warranty gives you specific legal rights, and you may also have other rights, which vary from state to state.

BROILMASTER®
PREMIUM GRILLS

MASTER PARTS DISTRIBUTOR LIST

To Order Parts Under Warranty, please contact your local Empire dealer. See the dealer locator at www.empirecomfort.com. To provide warranty service, your dealer will need your name and address, purchase date and serial number, and the nature of the problem with the unit. To Order Parts After the Warranty Period, please contact your dealer or one of the Master Parts Distributors listed below. This list changes from time to time. For the current list, please click on the Master Parts button at www.empirecomfort.com. Please note: Master Parts Distributors are independent businesses that stock the most commonly ordered Original Equipment repair parts for Heaters, Grills, and Fireplaces manufactured by Empire Comfort Systems Inc.

Dey Distributing
1401 Willow Lake Boulevard
Vadnais Heights, MN 55101

Phone: 651-490-9191
Toll Free: 800-397-1339
Website: www.deydistributing.com
Parts: Heater, Hearth and Grills

F. W. Webb Company
200 Locust Street
Hartford, CT 06114

Phone: 860-722-2433
Toll Free: 800-243-9360
Fax: 860-293-0479
Toll Free Fax: 800-274-2004
Website: www.fwwebb.com
Parts: Heater, Hearth and Grills

East Coast Energy Products
10 East Route 36
West Long Branch, NJ 07764

Phone: 732-870-8809
Toll Free: 800-755-8809
Fax: 732-870-8811
Website: www.eastcoastenergy.com
Parts: Heater, Hearth and Grills

HOW TO ORDER REPAIR PARTS

Parts Not Under Warranty

Parts can be ordered through your Service Person, Dealer, or a Master Parts Distributor. See this page for the Master Parts Distributors list. For best results, the **service person or dealer** should order parts through the distributor. Parts can be shipped directly to the **service person/dealer**.

Warranty Parts

Warranty parts will need a proof of purchase and can be ordered by your Service Person or Dealer. Proof of purchase is **required** for warranty parts.

All parts listed in the Parts List have a Part Number. When ordering parts, first obtain the Model Number and Serial Number from the name plate on your equipment. Then determine the Part Number (**not** the Index Number) and the Description of each part from the following illustration and part list. Be sure to give all this information . . .

Appliance Model Number _____ Part Description _____

Appliance Serial Number _____ Part Number _____

Type of Gas (Propane or Natural) _____

Do not order bolts, screws, washers or nuts. They are standard hardware items and can be purchased at any local hardware store. Shipments contingent upon strikes, fires and all causes beyond our control.

Your BROILMASTER Premium Gas Grill is identified by model number, serial number, and gas type. This information is provided on a product identification label located on the left side of the grill and under the grill's drip tray. For your convenience, complete this section for future reference when contacting your dealer.

BROILMASTER®
PREMIUM GRILLS

Contacting Your BROILMASTER Dealer

Before calling your BROILMASTER Dealer, please make sure you have the following information:

- Model number
- Date of purchase
- Proof of purchase by the original owner
- Serial number

The serial number can be located on the rating plate which is located on the left side of the grill or on the pull-out drip tray lighting instructions and also on the underside of the drip tray.

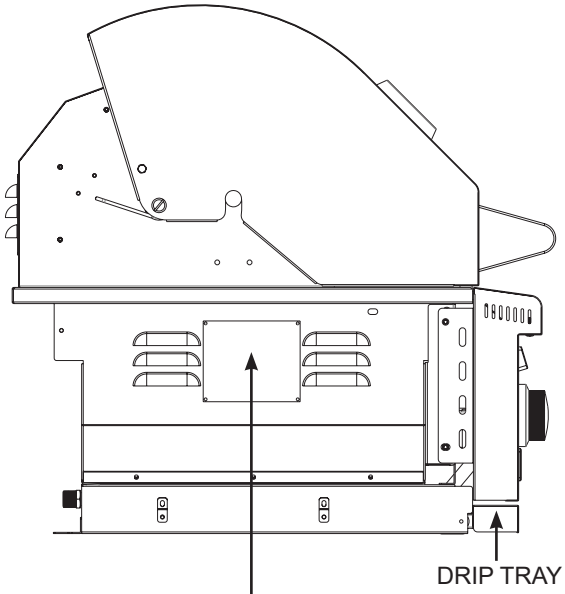

EMPIRE
COMFORT SYSTEMS

CONFORMS TO:
Z21.58-2018/CSA 1.6 - 2018
OUTDOOR COOKING GAS APPLIANCES

FOR OUTDOOR USE ONLY

	MODEL	ORIFICE SIZE (mm)	GAS TYPE	TOTAL INPUT BTU'S/HR
☐	BSG262LP-2	1.30	PROPANE	36000
☐	BSG262NG-2	2.08	NATURAL GAS	36000

	MODEL	ORIFICE SIZE (mm)	GAS TYPE	TOTAL INPUT BTU'S/HR
☐	BSG343LP-2	1.30	PROPANE	54000
	REAR	1.10	PROPANE	11000
☐	BSG343NG-2	2.08	NATURAL GAS	54000
	REAR	1.50	NATURAL GAS	11000
☐	BSG424LP-2	1.30	PROPANE	72000
	REAR	1.10	PROPANE	11000
☐	BSG424NG-2	2.08	NATURAL GAS	72000
	REAR	1.50	NATURAL GAS	11000

SERIAL# _____

RATING PLATE

WARNING: Fuels used in gas or oil-fired appliances, and the products of combustion of such fuels, contain chemicals known to the State of California to cause cancer, birth defects and/or other reproductive harm. This warning is issued pursuant to California Health & Safety Code Sec. 25249.6

PROPANE MODELS:
Do not store a Spare LP-gas cylinder under or near this appliance. Never fill the gas cylinder beyond 80% full. Storage of gas cylinder under or near this appliance and/or overfilling of this cylinder may cause a fire resulting in death or serious injury. CAUTION. A LP gas pressure regulator set at 11" WC MUST be used with this gas appliance. Turn off LP supply at Cylinder when this appliance is not in use. If stored indoors, detach and leave cylinder outdoors.

NATURAL GAS MODELS:
A NG gas pressure regulator set at 4" WC MUST be used with this appliance. The regulator supplied must be used with this appliance.

NOTE:
Do not place Under any Combustible Surface Minimum clearance to adjacent combustible construction is 16" from sides & 16" from the back of the hood. Always follow all City and Local codes. A Permit may be required and Your local City will provide this permit. Always use a certified professional gas appliance installer.

Only for installation in a built-in enclosure constructed of non-combustible materials.

GAS-FIRED
c UL us
LISTED
MH 46147

Belleville, IL USA

BROILMASTER®
PREMIUM GRILLS

BROILMASTER Parts List

Item No.	Description	Part Number		
		BSG262	BSG343	BSG424
1	Temperature Indicator Assy	BR0001	BR0001	BR0001
2	Hood	BR0002	BR0003	BR0004
3	Hood Handle	BR0005	BR0006	BR0007
4	Interior Light Assembly, Right	BR0008	BR0008	BR0008
5	Interior Light Assembly, Left	BR0180	BR0180	BR0009
6	Back Cover	BR0010	BR0011	BR0012
7	Ignitor And Wire, 48 inch	—	BR0013	BR0013
8	Thermocouple, 48 inch	—	BR0014	BR0014
9	Ignitor/Thermo-couple Cover	—	BR0015	BR0015
10a	Gas Line, 1/4 inch X 43 inch	—	BR0181	—
10b	Gas Line, 1/4 inch X 48 inch	—	—	BR0016
11	Warming Rack	BR0017	BR0018	BR0019
12	Infrared Rear Burner	—	BR0020	BR0021
13	Firebox	BR0022	BR0023	BR0024
14	Drip Tray	BR0025	BR0026	BR0027
15	Badge, BM Logo	BR0028	BR0028	BR0028
16	Control Knob	BR0029	BR0029	BR0029
17	Bezel, Main Burner	BR0030	BR0030	BR0030
18	Switch, Push Button	BR0031	BR0031	BR0031
19	Control Panel	BR0032	BR0033	BR0034
20	LED Heat Shield	BR0035	BR0036	BR0037
21	LED	BR0038	BR0038	BR0038
22	LED Wiring Harness	BR0039	BR0040	BR0041
23	Power Supply Harness	BR0042	BR0042	BR0042
24	Badge, Rear Burner	—	BR0043	BR0043

Item No.	Description	Part Number		
		BSG262	BSG343	BSG424
25	Valve, Main Burner	BR0044	BR0044	BR0044
26	Valve Grommet	BR0045	BR0045	BR0045
27a	Orifice, NAT, 2.08 mm	BR0046	BR0046	BR0046
27b	Orifice, LP, 1.30 mm	BR0047	BR0047	BR0047
28	Valve, Rear Burner	—	BR0048	BR0048
29a	Orifice, NAT, 1.50 mm	—	BR0049	BR0049
29b	Orifice, LP, 1.10 mm	—	BR0050	BR0050
30	Transformer	BR0051	BR0051	BR0051
31	Gas Manifold	BR0052	BR0053	BR0054
32	Heat Separator	BR0055	BR0055	BR0055
33	Cooking Grid	BR0056	BR0057	BR0058
34	Main Burner	BR0059	BR0059	BR0059
35	Vaporizer	BR0278	BR0278	BR0278
36	Regulator LP/NAT	BR0061	BR0061	BR0061
37	Bezel, Rear Burner	—	BR0062	BR0062
38	Control Knob, Rear Burner	—	BR0063	BR0063
39	Flame Carry Over	BR0182	BR0064	BR0064
40	Badge, Main Burner	BR0065	BR0065	BR0065
41	Hood Spring Assy, Right Side	BR0157	BR0066	BR0066
42	Hood Spring Assy, Left Side	BR0158	BR0067	BR0067
43	Rear Burner Orifice Cover	—	BR0068	BR0068
44	Lighting Tube	BR0183	BR0184	BR0069

Conversion Kits	Part Number
Natural Gas to Liquid Propane	BRNG - 0030
Liquid Propane to Natural Gas	BRLP - 0031

NOTE: Conversion Kits contain 4 main burner orifices and 1 rear burner orifice.

BROILMASTER PARTS LIST

BROILMASTER®
PREMIUM GRILLS

Parts Diagrams - BSG343N Shown

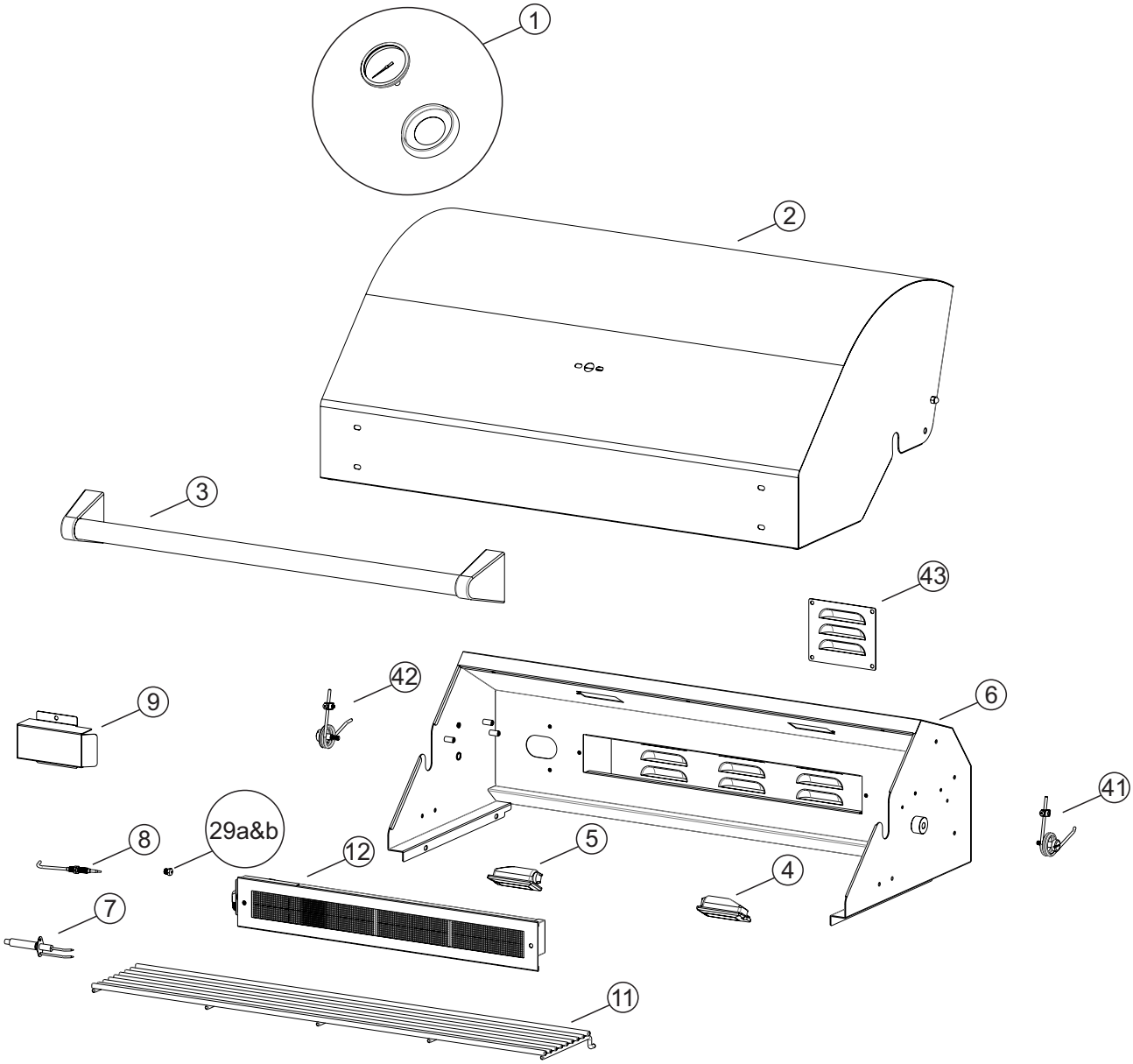

PARTS DIAGRAM

BROILMASTER®
PREMIUM GRILLS

Parts Diagrams - BSG343N Shown (Cont'd)

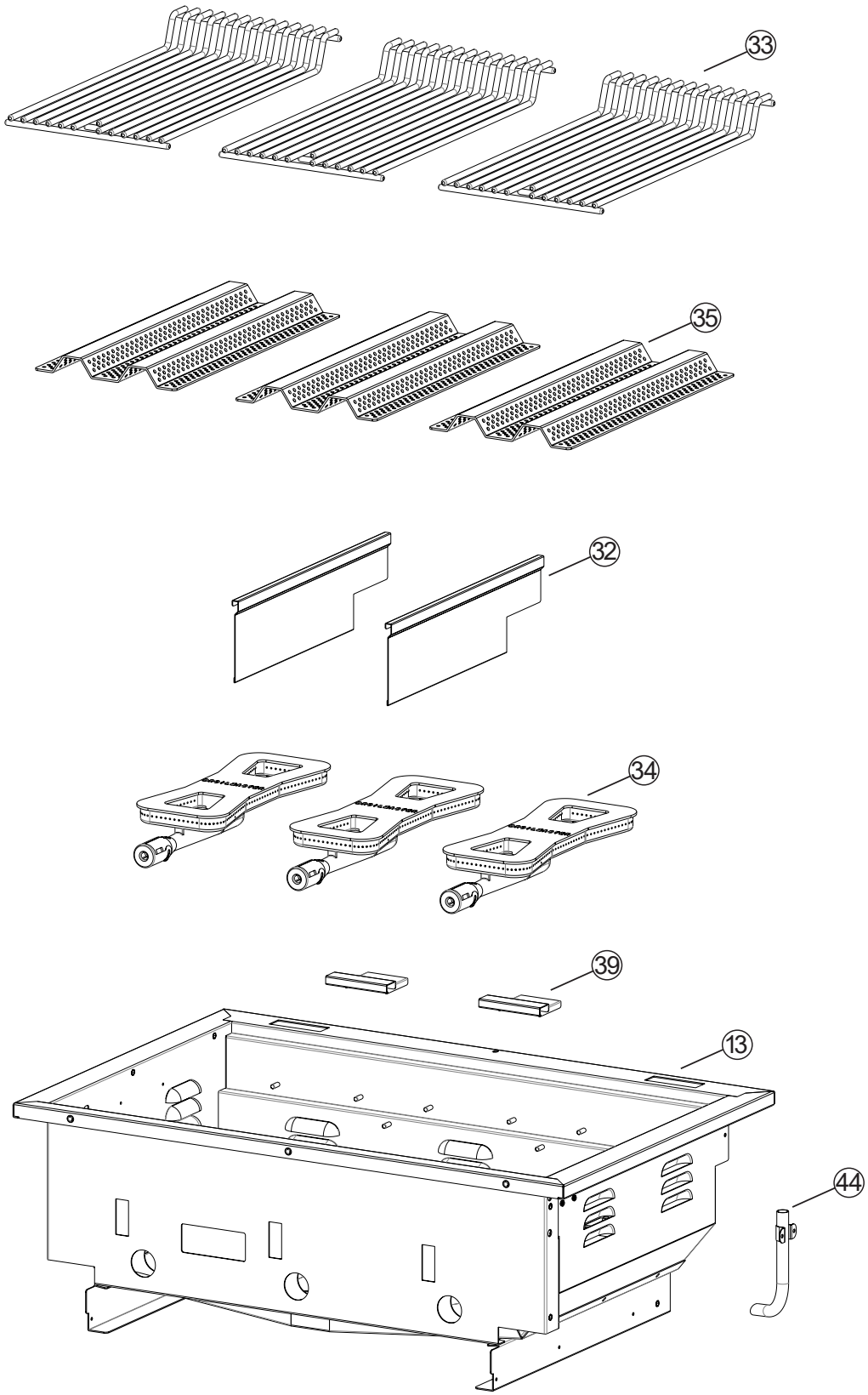

Parts Diagrams - BSG343N Shown (Cont'd)

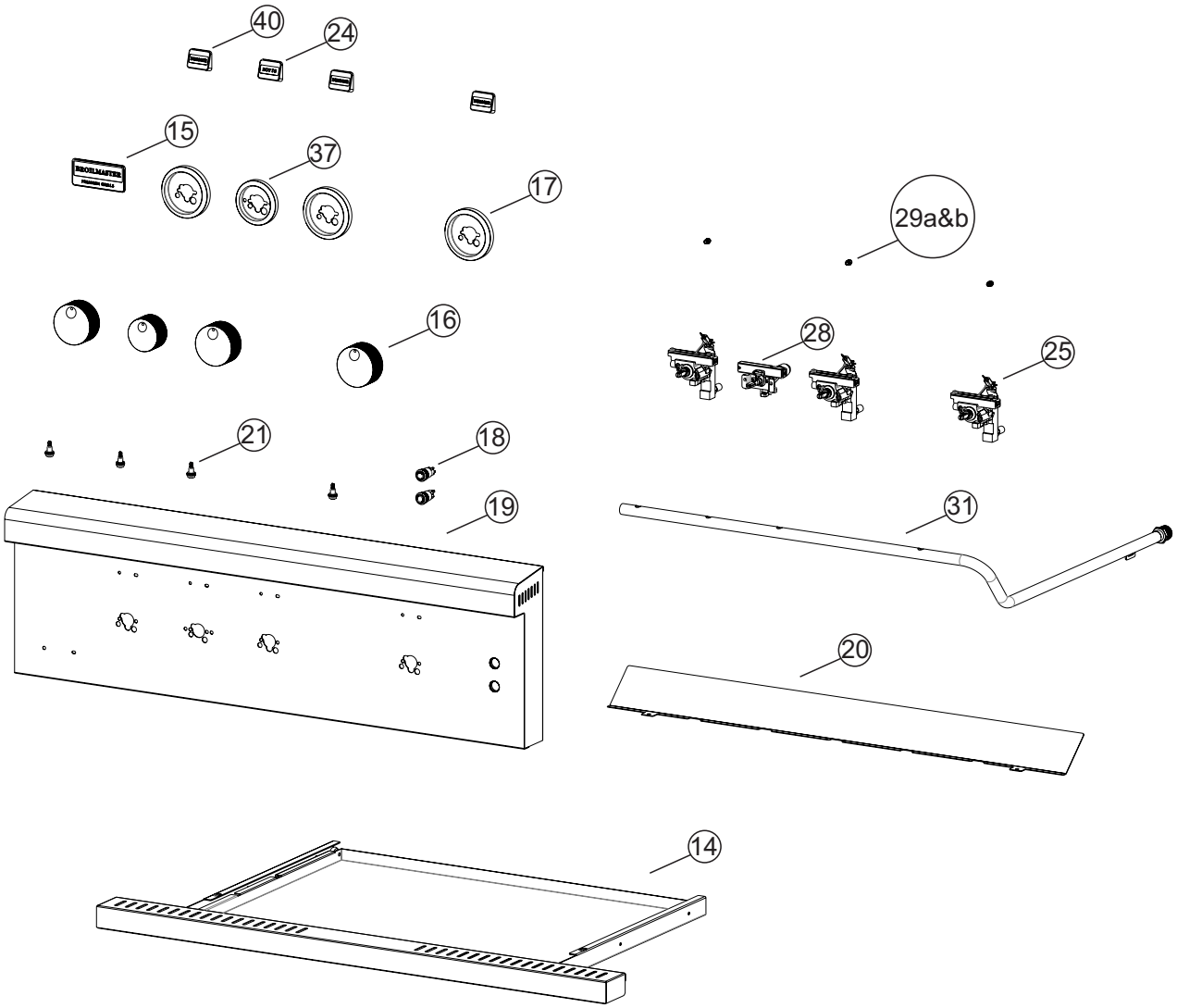

PARTS DIAGRAM

Parts Diagrams - (Cont'd)

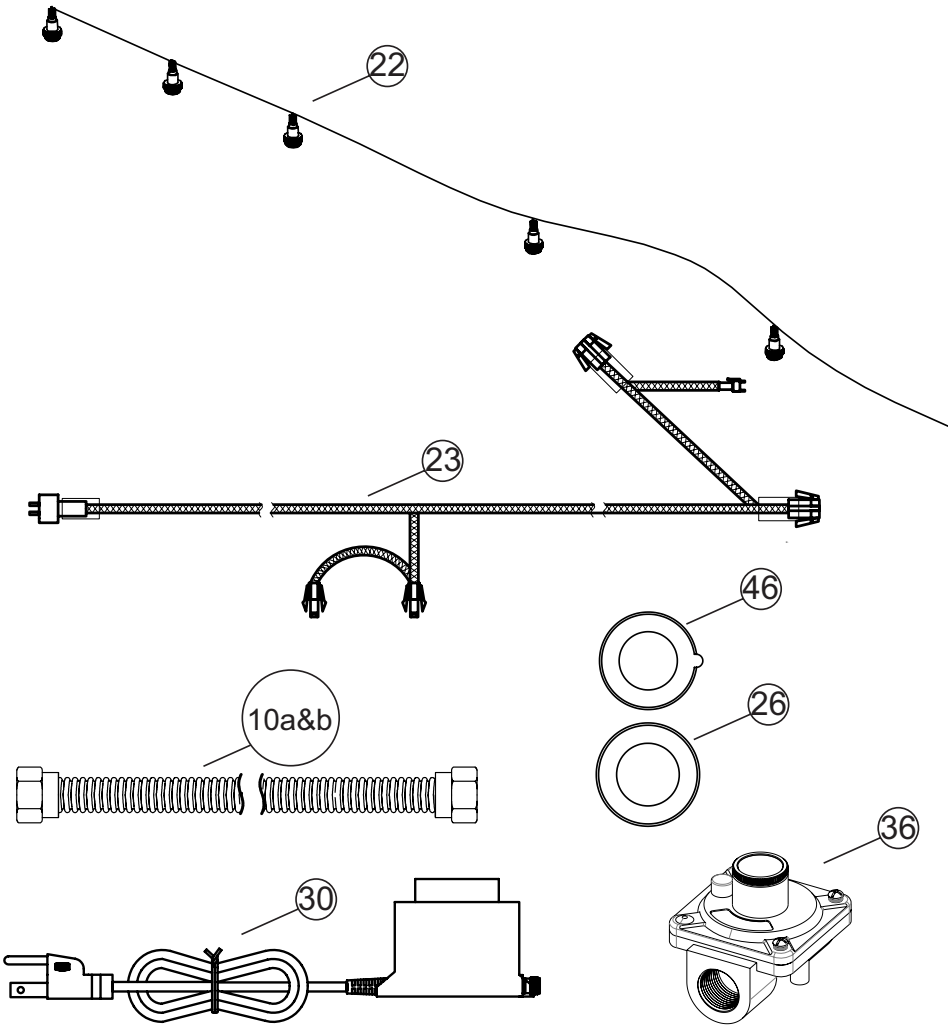

Sleeves, Side Burners, Covers And Island Accessories

SIDE BURNERS

PART NUMBER	SIDE BURNER
BSAF12DN	Single, 12 Inch, Drop-In With Top Controls
BSABF12N	Double, 12 Inch, Slide-In With Front Controls
BSABW16N	Power, 16 Inch, Slide-In With Front Controls

*Slide-In burners may be installed without a sleeve in an island made from non-combustible materials. The BSAF12DN drop-in side burner may be installed only in a grill island made from non-combustible materials.

BUILT-IN INSULATED SLEEVES (FOR GRILLS AND ACCESSORY BURNERS)

PART NUMBER	BUILT-IN INSULATED SLEEVE	FITS
BSASL26	26" Insulated Sleeve For Grill	BSG262 Grill
BSASL34	34" Insulated Sleeve For Grill	BSG343 Grill
BSASL42	42" Insulated Sleeve For Grill	BSG424 Grill
BSASL12	12" Insulated Sleeve For Sideburner	BSABF12 Side Burner
BSASL16	16" Insulated Sleeve For Sideburner	BSABN16 Side Burner

Sleeves, Side Burners, Covers And Island Accessories (Cont'd.)

ACCESSORIES FOR ALL BROILMASTER STAINLESS STEAL GRILLS

PART NUMBER	BUILT-IN INSULATED SLEEVE	FITS
BSAMR26	Rotisserie Kit For 26 Inch Grill	BSG262
BASMR34	Rotisserie Kit For 34 Inch Grill	BSG343
BSAMR42	Rotisserie Kit For 42 Inch Grill	BSG424
BSATY	Smoker Tray	BSG262, BSG343, BSG424
BSAVR	Infrared Sear Burner With V- Grate (Replaces One Bowtie Burner)	BSG262, BSG343, BSG424
NG12	12 Ft QC Hose	BSG262, BSG343, BSG424

CARTS

PART NUMBER	BUILT-IN INSULATED SLEEVE	FITS
BSACT26	S/S Cart With 2 Doors And Fixed Side Shelves	BSG262 Grill
BSACT34	S/S Cart With 2 Doors And Fixed Side Shelves	BSG343 Grill
BSACT42	S/S Cart With 2 Doors And Fixed Side Shelves	BSG424 Grill

Sleeves, Side Burners, Covers And Island Accessories (Cont'd.)

DOORS, DRAWERS

PART NUMBER	DOORS AND DRAWERS (STAINLESS STEEL)
BSAD1722	Single Door 17" W x 22" H
BSAD2422	Single Door 24" W x 22" H
BSAD2622D	Double Doors 26" W x 22" H (Fits Under 26" Grill In Island)
BSAD3422D	Double Doors 34" W x 22" H (Fits Under 34" Grill In Island)
BSAD4222D	Double Doors 42" W x 22" H (Fits Under 42" Grill In Island)
BSAW1826R	Drawer For Roll-Out Trash Container, 18" W x 26" H
BSAW1826T	Triple Drawer, 18" W x 26" H
BSAW2022D	Double Drawer, 20" W x 22" H
BSAW2022	Single Drawer – For LP Tank Or Trash Can 20" W x 22" H
BSAW3422SD	Single Door With Double Drawer 34" W x 22" H (Fits Under 34" Grill In Island)
BSAW4222ST	Single Door With Triple Drawer 42" W x 22" H (Fits Under 42" Grill In Island)
BRB-1	S/S Vent Register Kit 10" x 2 1/4" Opening (2 Per Kit)

BAR

PART NUMBER	BAR ACCESSORIES
BSACL	Insulated Cooler – Slide-In
BSACW3015W	Drawer – Storage / Cooler, 30" W x 15" H
BSASF	Bar Sink With Faucet – Slide-In

COVERS

PART NUMBER	GRILL COVERS
BASCV26S	For 26" Built-In Grill
BASCV34S	For 34" Built-In Grill
BASCV42S	For 42" Built-In Grill
BASCV26L	For 26" Cart Grill With 2 Fixed Side Shelves
BASCV34L	For 34" Cart Grill With 2 Fixed Side Shelves
BASCV42L	For 42" Cart Grill With 2 Fixed Side Shelves

Appliance Service History

Date	Dealer Name	Service Technician Name	Service Performed/Notes

This page intentionally left blank.

BROILMASTER®

PREMIUM GRILLS

BROILMASTER

A Division of Empire Comfort Systems, Inc.
Visit our web site at www.broilmaster.com
If you have a general question about
our products, please e-mail us
at info@empirecomfort.com.
If you have a service or repair question,
please contact your dealer.

GAS-FIRED
C UL US
LISTED